Marconi "PLAYBOY"
Model 1003
Electric Phonograph

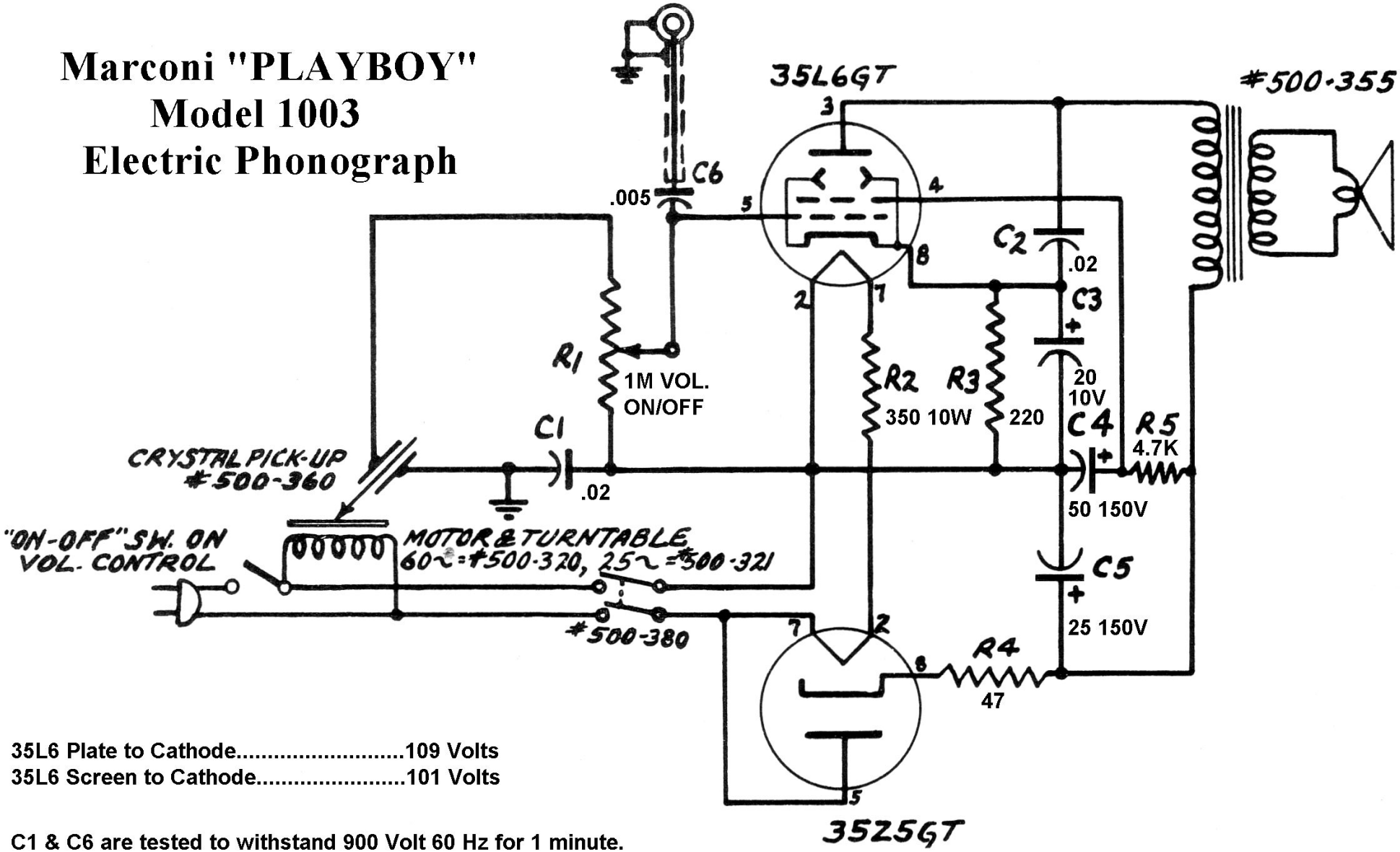

35L6 Plate to Cathode.....109 Volts
35L6 Screen to Cathode.....101 Volts

C1 & C6 are tested to withstand 900 Volt 60 Hz for 1 minute.

The motor should be lubricated once or twice a year by placing a few drops of light motor oil on the turntable motor and idler wheel shaft.

<u>CAUTION</u> - The motor drive shaft and rubber tire on the idler must be kept clean and entirely free from oil and grease at all times. Any quick drying naptha is satisfactory for cleaning these parts.

1 - The motor and pick-up must be checked separately with any good receiver fitted with a phonograph jack or amplifier by interconnecting with sheilded accessory cable supplied.

2 - If this operation is satisfactory and the built in amplifier does not operate this unit should be removed and all component parts checked by aid of the diagram of connections.