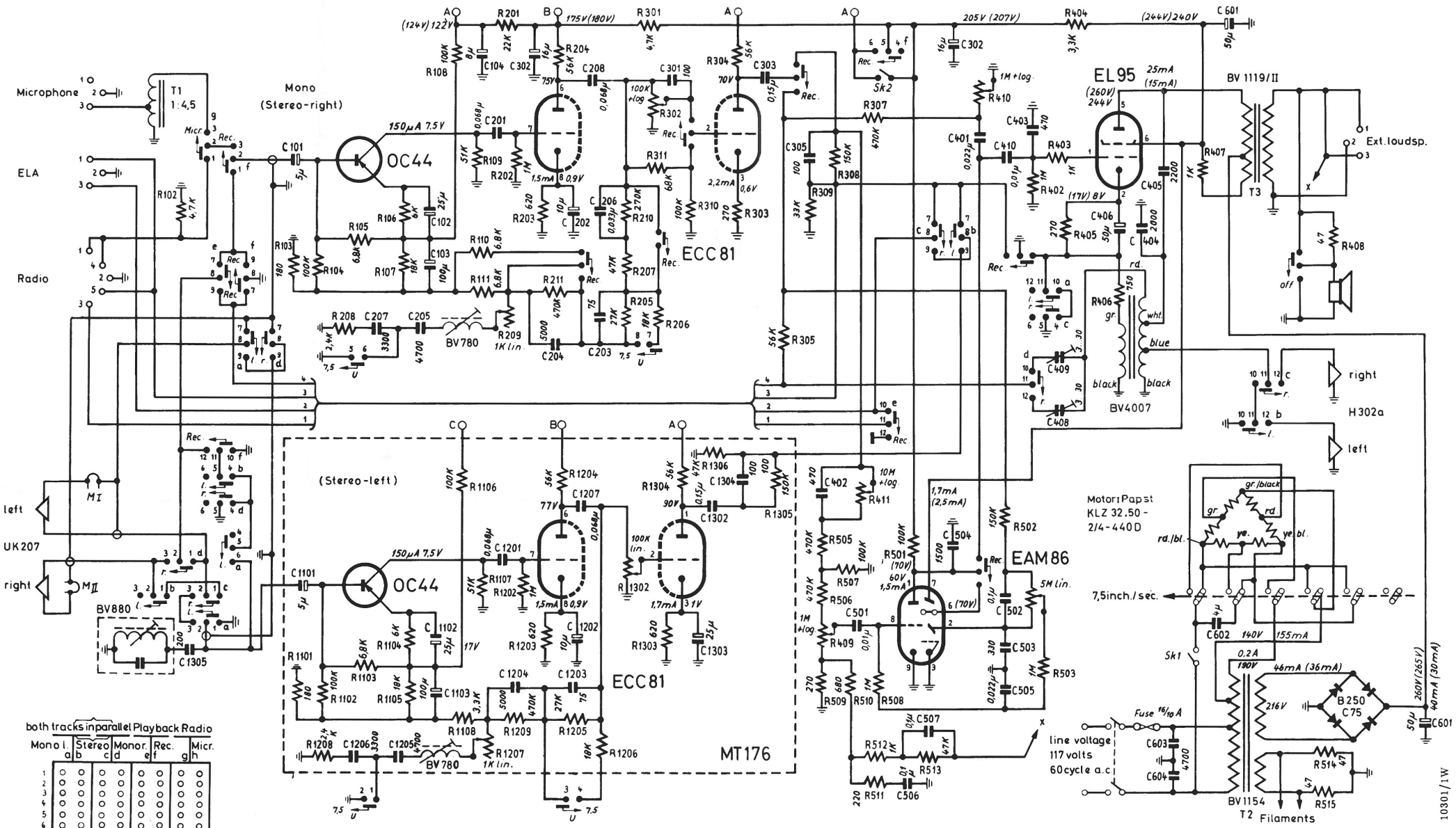
Microphone
ELA
Radio
Mono
(Stereo-right)
(Stereo-left)
OC44
ECC81
EL95
EAM86
MT176
BV 1119/II
BV780
BV880
BV4007
BV1154
UK207
H302a
Ext.loudsp.
Motor: Papst
KLZ 32.50 -
2/4-440D
7,5inch./sec.
line voltage
117 volts
60cycle a.c.
Filaments
both tracks in parallel Playback Radio
Mono l. Stereo Monor. Rec. Micr.
Febr. 61 WS
Voltage and currents shown are measured with
1000 ohms per volt meter and at transistor stages
with VTVM of more than 10 megohms input impedance,
in "Playback" position (both tracks in parallel).
Values in brackets( ) are valid for "Record".
AD2-1028
TAPE RECORDER
MONO-TYPE-MT155
STEREO-TYPE-MT156
(with additional circuit board MT176)
KÖRTING RADIO WERKE G.m.b.H.
Printed in Western Germany
10301/1W