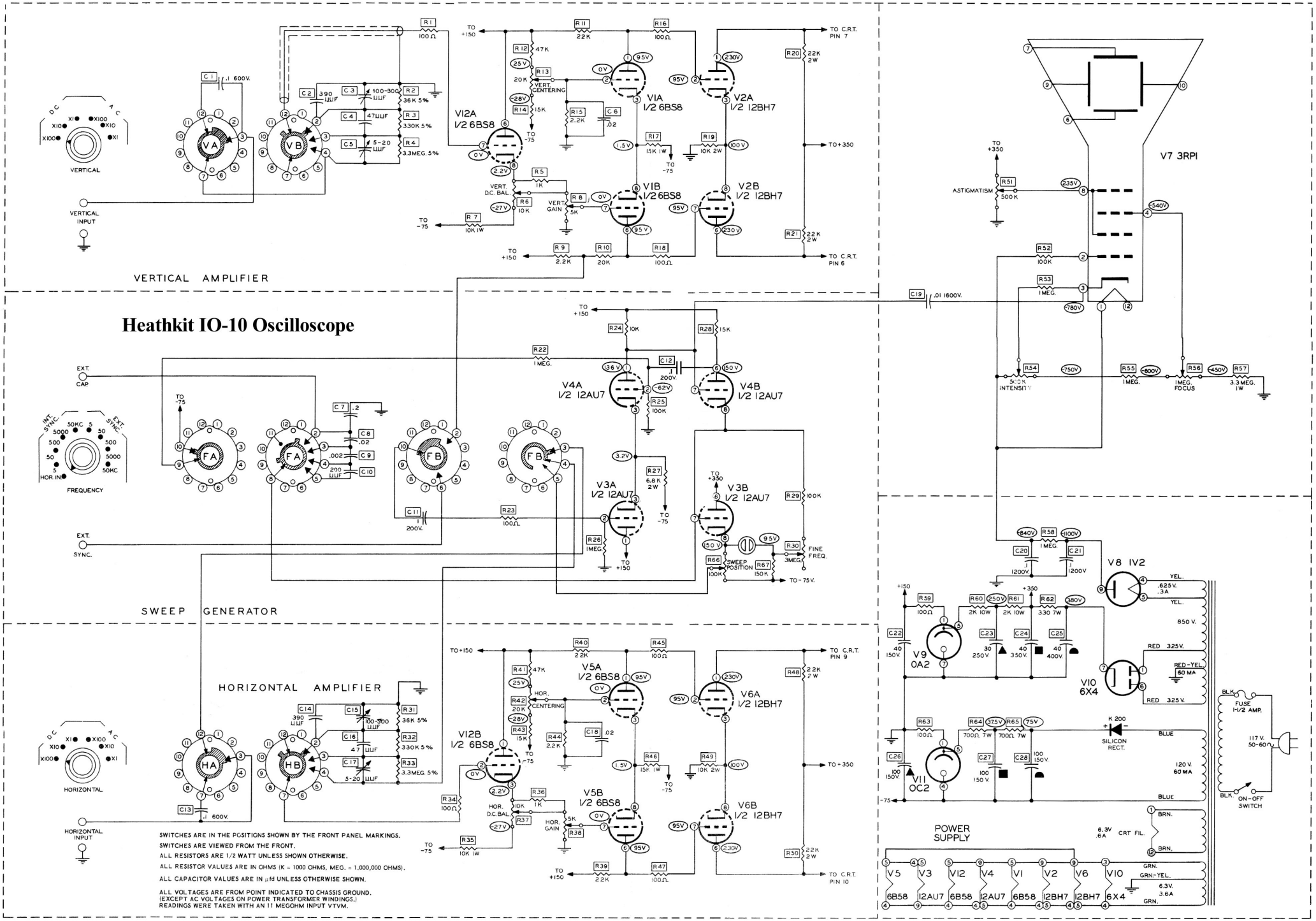Heathkit IO-10 Oscilloscope