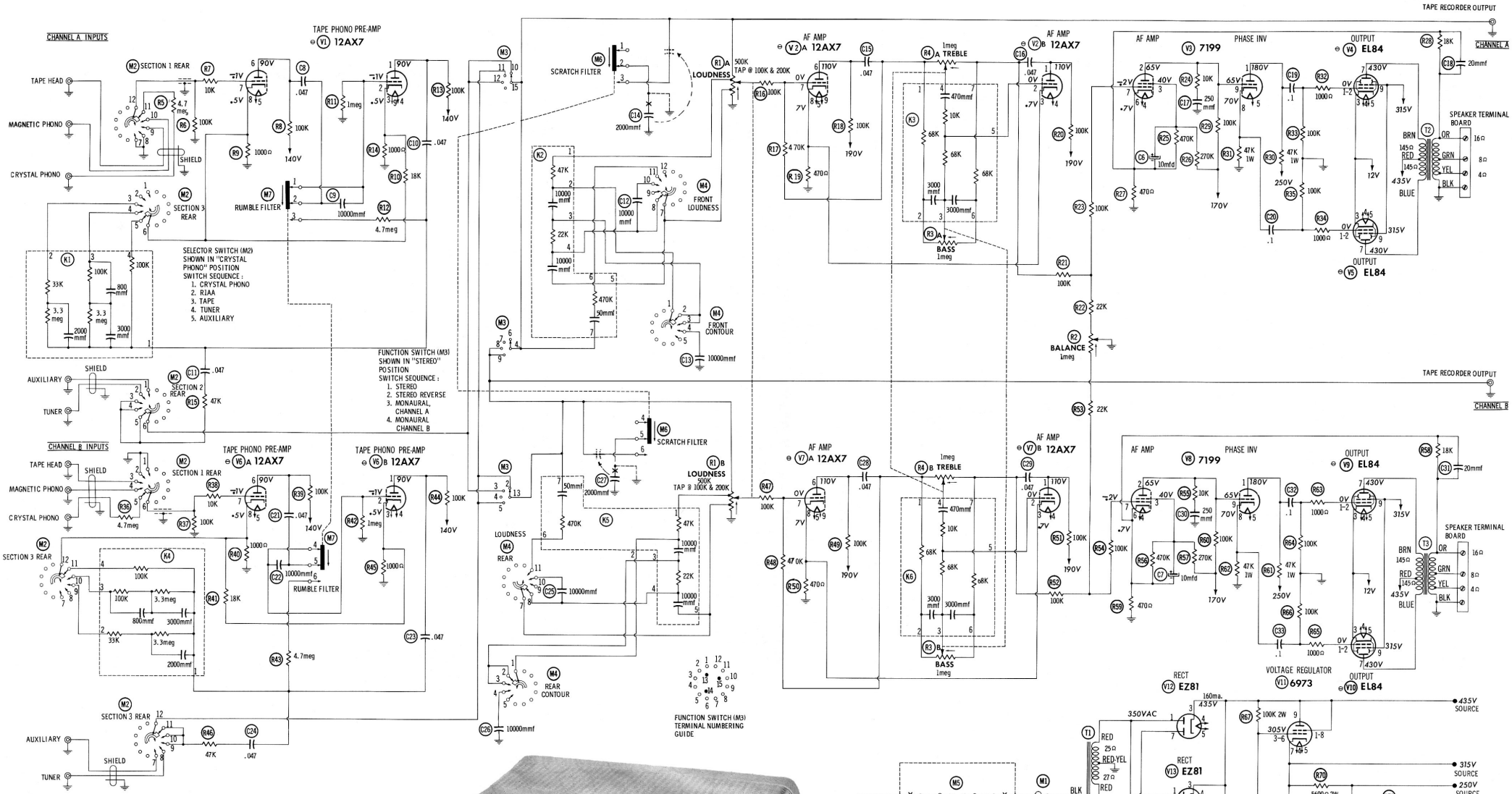

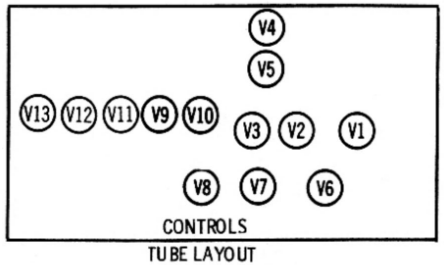

TUBE LAYOUT
(BOTTOM VIEW)

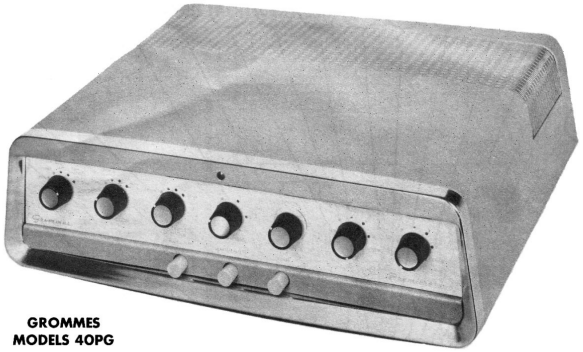

GROMMES
MODELS 40PG