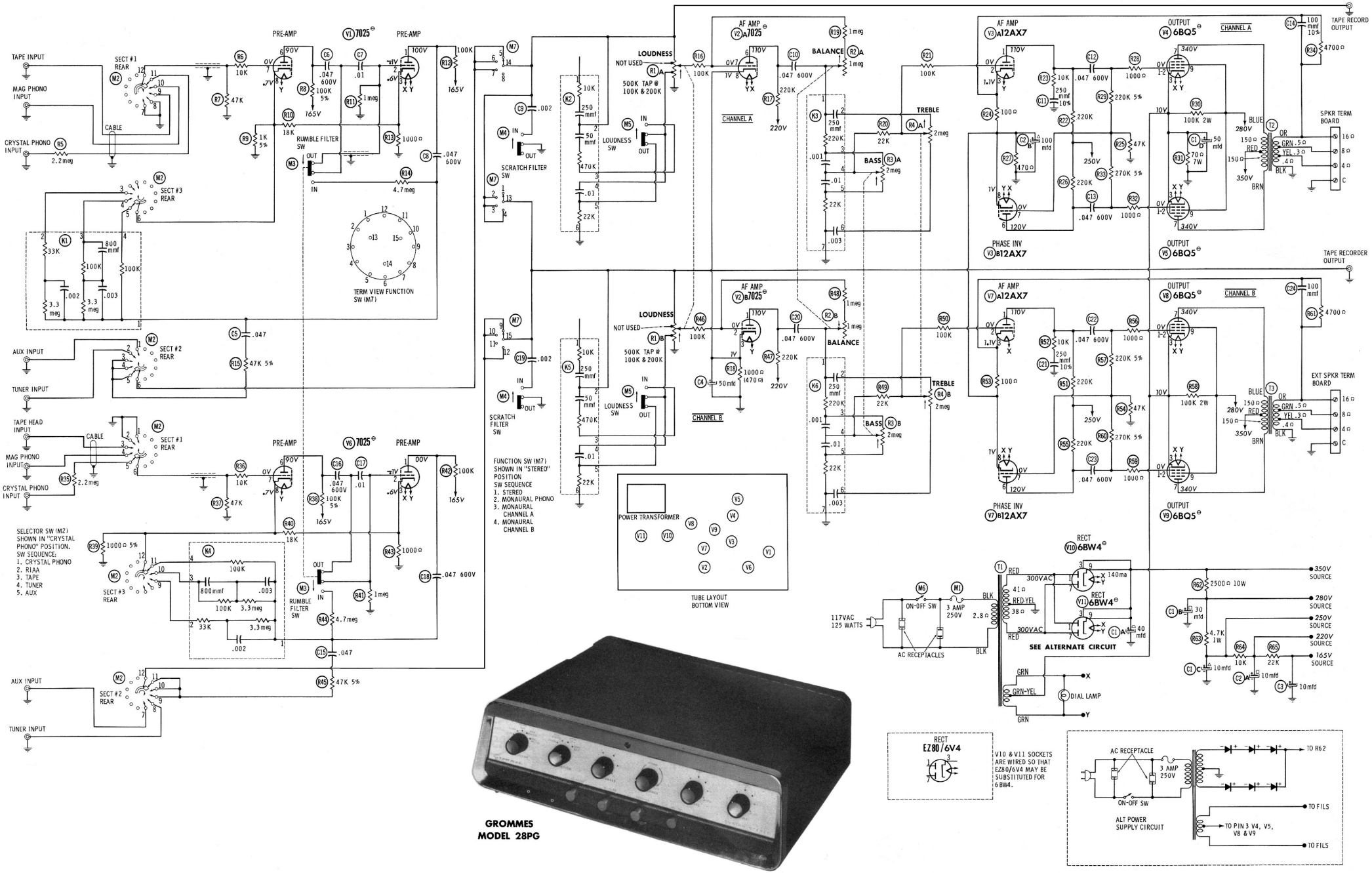

GROMMES MODEL 28PG