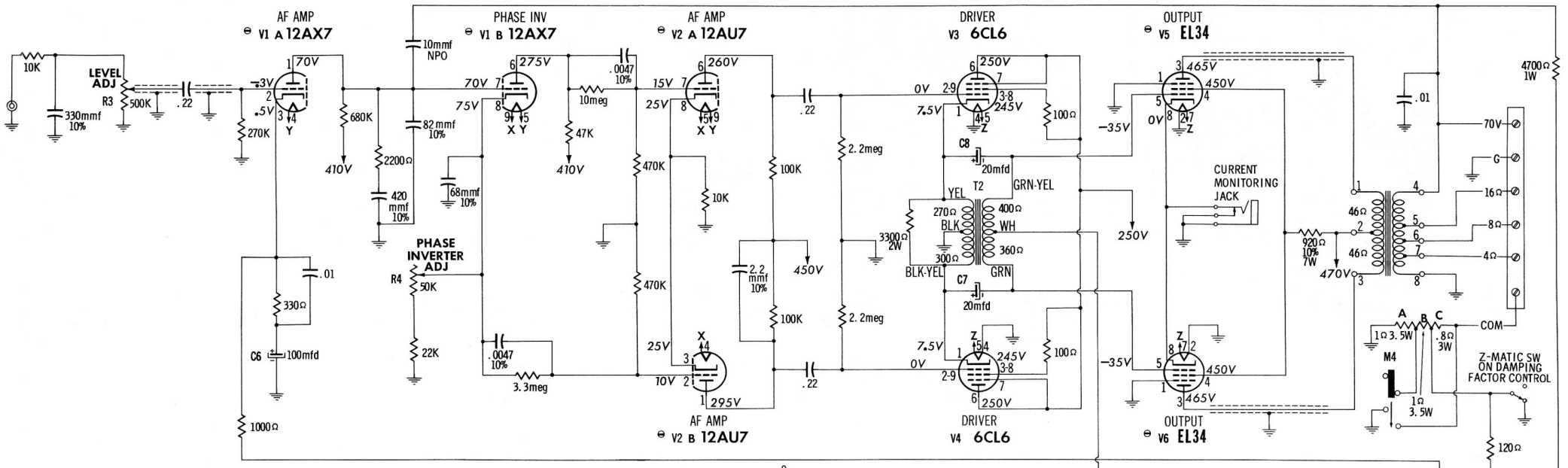

PHASE INVERTER ADJUSTMENT (R4)

This adjustment should not be attempted unless the associated circuit has been repaired or tampered with, and then only with the proper equipment.

1. Connect an accurate low-distortion audio generator to the input jack.
2. Connect a 16Ω 150W resistor to the speaker terminals (16Ω & comm.)
3. Connect an harmonic or intermodulation distortion analyzer across the resistor.
4. Set Impedance Switch (M4) to 16Ω and the Z-Matic Control (R1) to "OFF".
5. Allow all equipment to warm up for 30 minutes.
6. Accurately adjust the generator to 1KC and its output slightly below the clipping point (approx. 1db) at the amplifier output. This output must be held constant.
7. Adjust the Phase Inverter R4 for minimum distortion on the analyzer.

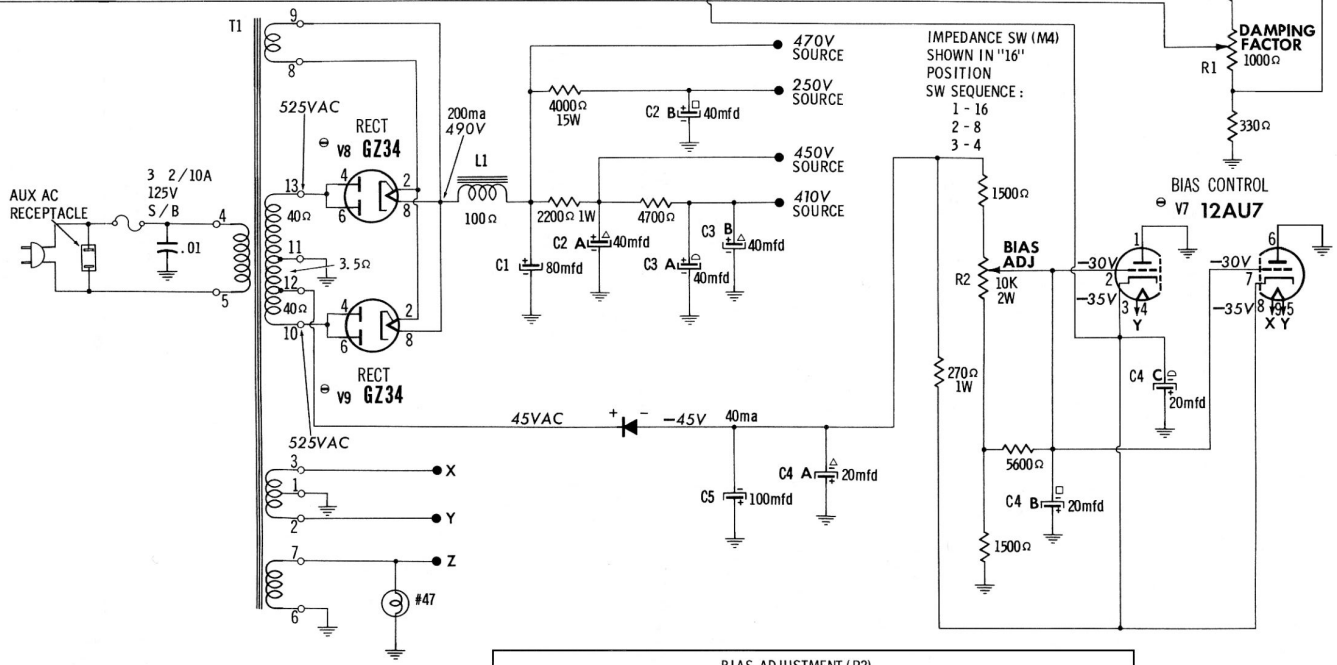

1. DC voltage measurements taken with vacuum tube voltmeter; AC voltages measured at 1000 ohms per volt.
2. Socket connections are shown as bottom views.
3. Measured values are from socket pin to common negative.
4. Line voltage maintained at 117 volts for voltage readings.
5. Nominal tolerance of component values makes possible a variation of ± 15% in voltage and resistance readings.
6. All controls at minimum, proper output load connected.

BIAS ADJUSTMENT (R2)

If either output tube (V5, V6) is replaced, R2 should be adjusted.

1. Turn Level (R2) Control fully counterclockwise.
2. Connect the speaker or proper load to the unit.
3. Connect a 0-150ma. DC meter in the plate current jack. (If desired, the close circuit type jack may be opened and the meter connected across the jack terminals).
4. Allow the unit to warm up for 30 minutes.
5. Adjust R2 for a meter reading of 125ma.

FISHER MODEL 200