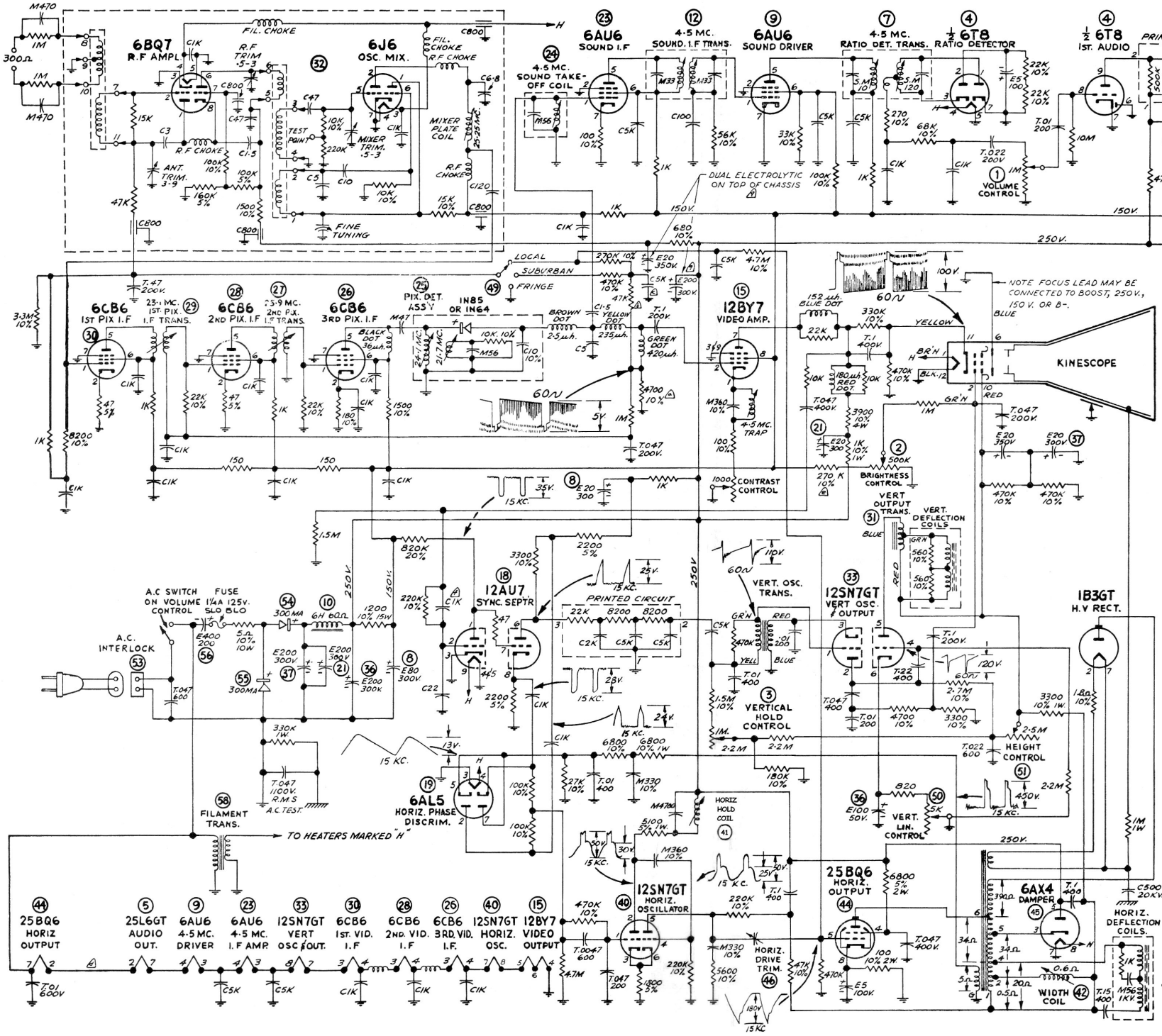

Eletrohome / Airline T-94, T-102, T-109

Viking TV54-333, TV54-334, TV54-342, TV54-343, TV54-344

SYMBOLS

⏚ B- GROUND TO TOP CHASSIS PLATE. THIS IS DIRECTLY CONNECTED TO ONE SIDE OF A.C. LINE.

GROUND CONNECTION TO CHASSIS SIDES. ISOLATED FROM B- PLATE.

COMPONENT VALUES

K = 1000. M = 1000,000

RESISTORS: HALF WATT, 20% TOLERANCE UNLESS OTHERWISE NOTED.

CONDENSERS:

C = CERAMIC, FOLLOWED BY CAPACITY IN MMFD. AND TOLERANCE AND VOLTAGE IF CRITICAL

M = MICA, FOLLOWED BY CAPACITY IN MMFD AND TOLERANCE AND VOLTAGE IF CRITICAL.

T = MOULDED TUBULAR, FOLLOWED BY CAPACITY IN MFD. AND D.C.W.V.

E = ELECTROLYTIC, FOLLOWED BY CAPACITY IN MFD. AND D.C.W.V.

S.M = SILVER MICA.

B+ VOLTAGES AND COIL RESISTANCES ARE SHOWN.

SOUND I.F = 21.7 & 4.5 MC.

PICTURE I.F = 26.2 MC.

VIDEO RESPONSE TO 3.2 MC.

CIRCLED NUMBERS, EG. (21) REFER TO PICTORIAL DIAGRAM.

C.N. No	DATE	CHANGE	SYM.	CK.
		◊ NOTE ADDED (M)		
53-310	8-27-53	WAS 270 10% (A) WAS C 270 (A) ELECTRO		
		RELOCATED ON FIL. STRING (A)		
		C5K COND. ADDED (A) 12SN7GT TUBE		
53-306	8-27-53	WAS 4700 20% (A) 47 K RES. ADDED (A)		
	8-7-53	REDRAWN.		

18 VD 17