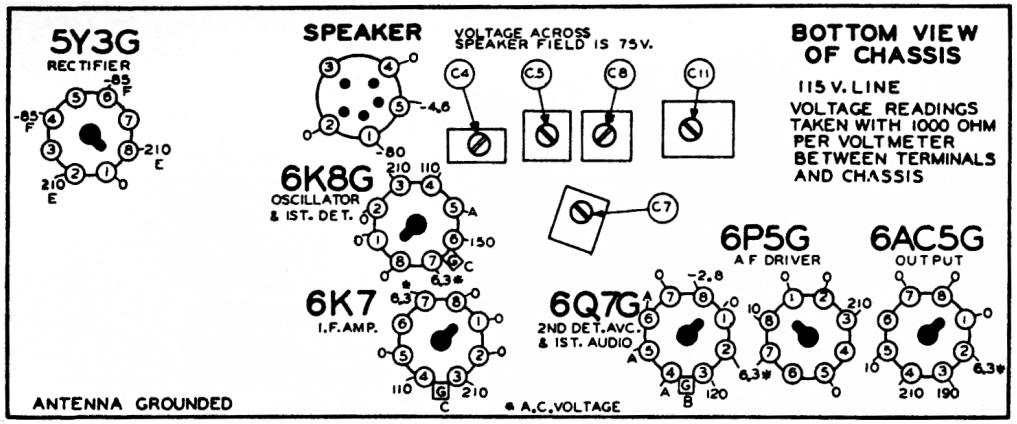


## RESISTORS

| | | |
|---|---|---|
| R1 | 13041 | 800 ohm—⅓ w. |
| R2 | 13017 | 10M ohm—⅓ w. |
| R3 | 13020 | 100M ohm—⅓ w. |
| R4 | 13012 | 50M ohm—⅓ w. |
| R5 | 13017 | 10M ohm—⅓ w. |
| R6 | 13031 | 1500 ohm—⅓ w. |
| R7 | 13042 | 20M ohm—½ w. |
| R8 | 1304 | 3 megohm—⅓ w |
| R9 | 101126 | 1 megohm control |
| R10 | 130233 | 60 ohm—⅓ w. |
| R11 | 1304 | 3 megohm—⅓ w. |
| R12 | 130203 | 40 ohm—⅓ w. |
| R13 | 1309 | 200M ohm—⅓ w. |
| R14 | 13019 | 1 megohm—⅓ w. |
| R15 | 130232 | 25M ohm—⅓ w. |

## CONDENSERS

| | | |
|---|---|---|
| CA | | Adjustable Capacitor |
| CB | | Adjustable Capacitor |
| C | 10274 | 2 gang variable condenser |
| C1 | 12987 | .000105 Mica |
| C2 | 12949 | .00009 Mica |
| C3 | 10037 | .003 x 600 v. |
| C4 | 12439 | SW. Antenna Trimmer 2-25 mmfd. |
| C5 | 12453 | BC. Antenna Trimmer 1-10 mmfd. |
| C6 | 10022 | .05 x 400 v. |
| C7 | 12439 | SW. Oscillator Trimmer 2-25 mmfd. |
| C8 | 12453 | BC. Oscillator Trimmer 2-25 mmfd. |
| C9 | 12938 | .00005 Mica |
| C10 | 10025 | .002 x 600 v. |
| C11 | 12451B | 350 mmfd. W.C. B.C. Series Pad |
| C12 | 129112 | .0041 Compression Type |
| C13 | 10053 | .25 x 400 v. |
| C14 | 12939 | .00005 Mica |
| C15 | 10011 | .01 x 400 v. |
| C16 | 1292 | .0005 Mica |
| C17 | 10011 | .01 x 400 v. |
| C18 | 10013 | .05 x 400 v. |
| C19 | 11963B | 8 mfd.—350 w. v. lytic |
| C20 | 11963B | 12 mfd.—350 w. v. lytic |

## PARTS

T1 SW. B. C. Antenna Coil Complete
T2 SW. B. C. Oscillator Coil Complete
T3 Input I. F.—465 kc.
T4 Output I. F.—465 kc.
T5 Output Transformer
T6 Power Transformer
T7 6" Speaker Dynamic (1500 ohm field)
S1 Band Switch
S2 Off-on Switch on volume control
P1 6.3 v. Pilot Light T-44

# MODEL 665

A – CANNOT BE MEASURED WITH VOLTMETER.
B – BIAS OF -1.8V READ ACROSS R-12
C – BIAS OF -2.8V READ ACROSS R-10
E – 5V AC READ ACROSS TER. 2 & 8
F – 560V AC READ ACROSS TER. 4 & 6

## REAR OF CHASSIS
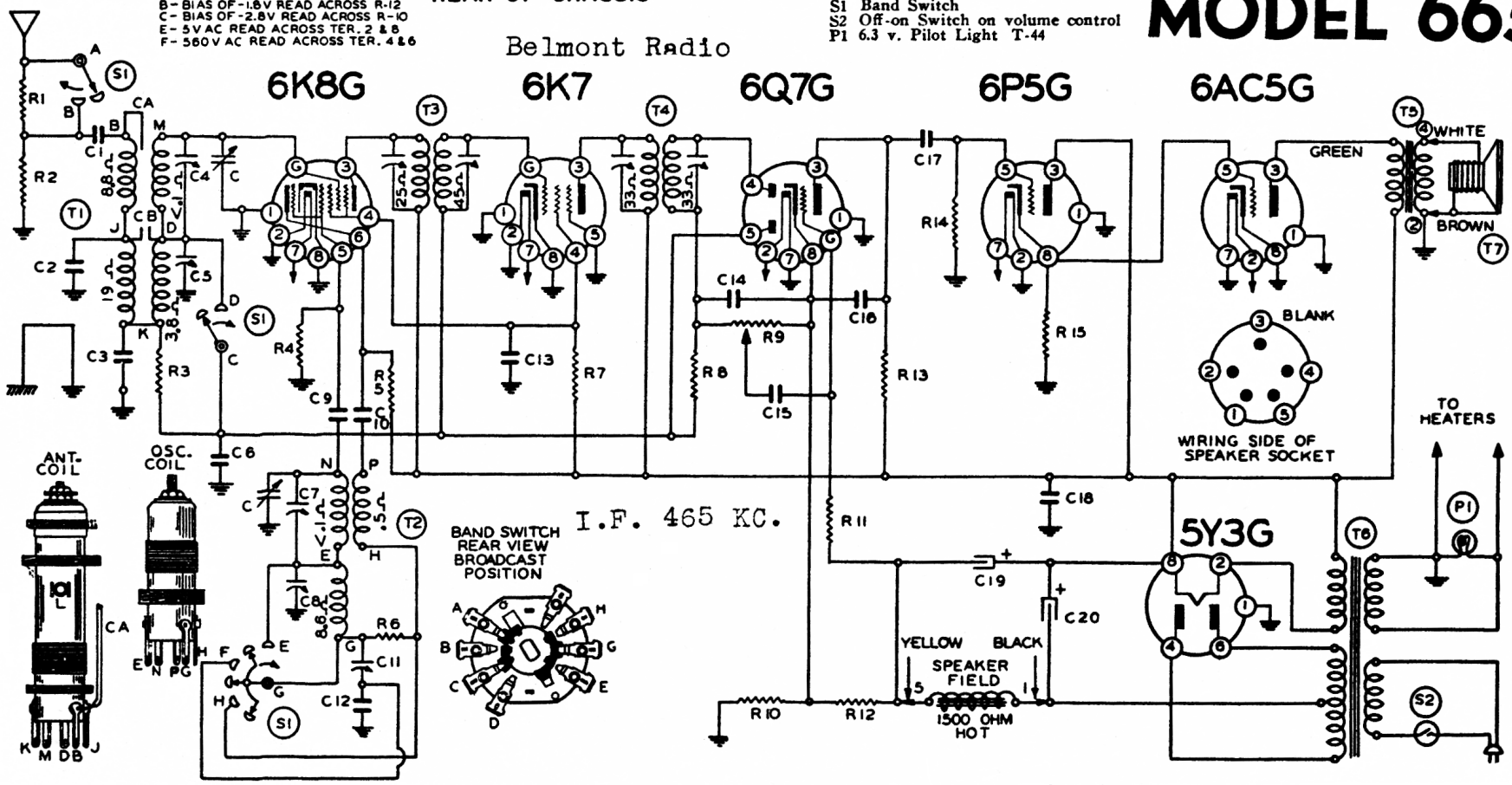
Belmont Radio