Instruction book

Service parts

Chiu Ting

MODEL: CT-918A
CT-918AM

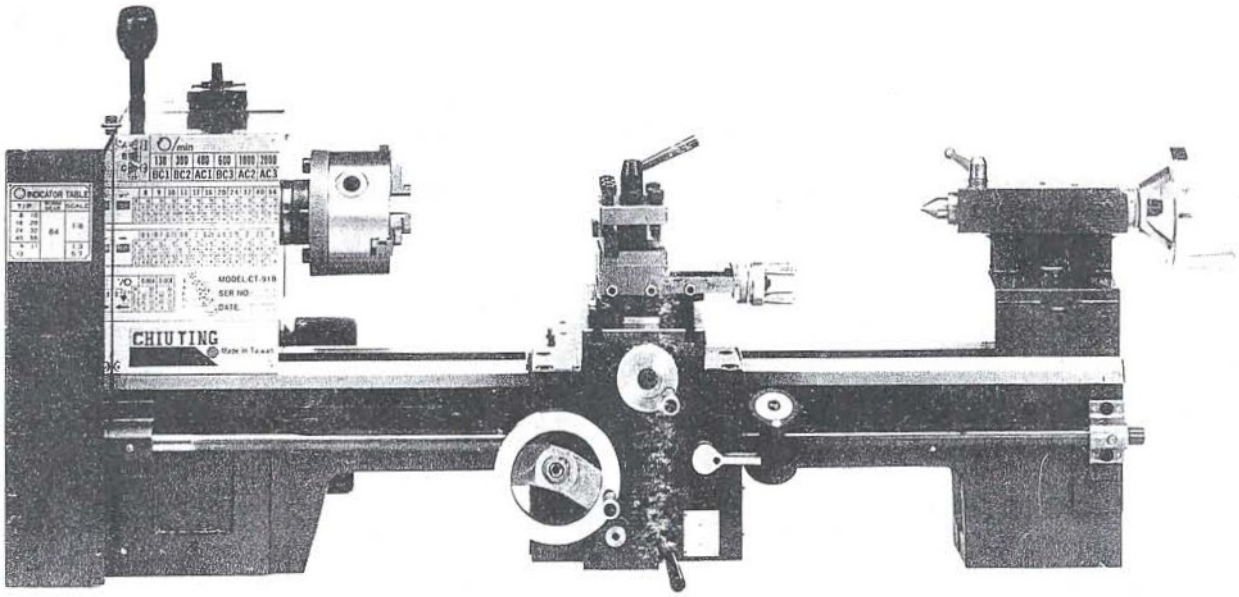

GENERAL SAFETY RULES FOR POWER TOOLS

WARNING – DO NOT ATTEMPT TO OPERATE UNTIL YOU HAVE READ THOROUGHLY AND UNDERSTAND COMPLETELY ALL INSTRUCTIONS, RULES, ETC. CONTAINED IN THIS MANUAL. FAILURE TO COMPLY CAN RESULT IN ACCIDENTS INVOLVING FIRE, ELECTRIC SHOCK, OR SERIOUS PERSONAL INJURY. MAINTAIN OWNERS MANUAL AND REVIEW FREQUENTLY FOR CONTINUING SAFE OPERATION, AND INSTRUCTING POSSIBLE THIRD-PARTY USER.

READ ALL INSTRUCTIONS

1. KNOW YOUR POWER TOOL
   For your own safety, read the owner's manual carefully. Learn its application and limitations as well as the specific potential hazards pecular to this tool.

2. GUARD AGAINST ELECTRICAL SHOCK BY PREVENTING BODY CONTACT WITH GROUNDED SURFACES. For example: Pipes, radiators, ranges, refrigerator enclosures.

3. KEEP GUARDS IN PLACE and in working order.

4. REMOVE ADJUSTING KEYS AND WRENCHES
   Form habit of checking to see that keys and adjusting wrenches are removed from tool before turning on tool.

5. KEEP WORK AREA CLEAN
   Cluttered areas and benches invite accidents.

6. DON'T USE IN DANGEROUS ENVIRONMENT
   Don't use power tools in damp or wet locations, or expose them to rain. Keep work area well illuminated.

7. KEEP CHILDREN AWAY
   All visitors should be kept a safe distance from work area.

8. MAKE WORKSHOP KID PROOF
   With padlocks, master switches, or by removing starter keys.

9. DON'T FORCE TOOL
   It will do the job better and be safer at the rate for which it was designed.

10. USE RIGHT TOOL
    Don't force tool or attachment to do a job for-which it was not designed.

11. WEAR PROPER APPAREL
    No loose clothing, gloves, neckties, rings bracelets, or jewelry to get caught in moving parts. Nonslip footwear is recommended. Wear protective hair covering to contain long hair.

12. ALWAYS USE SAFETY GLASSES
    Also use face or dust mask if cutting operation is dusty. Everyday eyeglasses only have impact-resistant lenses. They are NOT safety glasses.

13. SECURE WORK
    Use clamps or a vise to hold work when practical. It's safer than using your hand and frees both hands to operate tool.

14. DON'T OVERREACH
    Keep your proper footing and balance at all times.

15. MAINTAIN TOOLS IN TOP CONDITION
    Keep tools sharp and clean for best and safest performance. Follow instructions for lubricating and changing accessories.

16. DISCONNECT TOOLS FROM POWER SOURCE
    Before servicing and when changing accessories such as blades, bits, cutters, or when mounting and re-mounting motor.

17. AVOID ACCIDENTAL STARTING
    Make sure switch is in "OFF" position before pluggging in cord.

18. USE RECOMMENDED ACCESSORIES
    CONSULT THE OWNER's manual for recommended accessories. Use of improper accessories may be hazardous.

19. NEVER STAND ON TOOL
    Serious injury could occur if the tool is tipped or if the cutting tool is unintentionally contacted.

20. CHECK DAMAGED PARTS
    Before further use of the tool, a guard or other part that is damaged should be carefully checked to ensure that it will operate properly and perform its intended function - check for alignment of moving parts, binding of moving parts, breakage of parts, mounting, and any other conditions that may affect its operation. A guard or other part that is damaged should be properly repaired or replaced.

21. DIRECTION OF FEED
    Feed work into a blade or cutter against the direction of rotation of the blade or cutter only.

22. NEVER LEAVE TOOL RUNNING UNATTENDED. TURN POWER OFF.
    Don't leave tool until it comes to a complete stop.

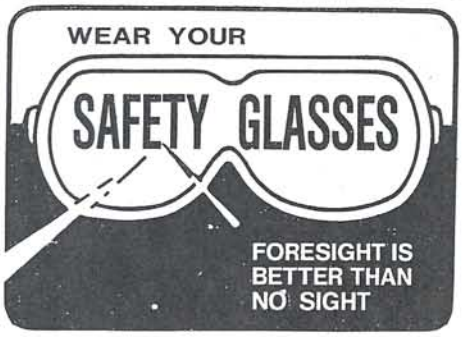

The operation of any power tool can result in foreign objects being thrown into the eyes, which can result in severe eye damage. Always wear safety glasses or eye shields before using your Lathe. We recommend Wide Vision Safety Mask for use over spectacles, or standard safety glasses.

SAFETY RULES FOR LATHES

Safety is a combination of operator common serse and alertness at all times when the Lathe is being used. Study these safety rules and general safety rules before operating and retain for future use.

1. Wear eye protection.

2. Never attempt any operation or adjustment if proceedure is not under stood.

3. Keep fingers away from revolving parts and cutting tools while in operation.

4. Never force cutting action.

5. Never perform an abnormal or little used operation without study and use of adequate blocks, jigs, stops, fixtures etc.

6. Use of shop manual such as "Machinery's Handbook" or similar is recommended for cutting speeds, feeds and operation detail.

7. Do not remove drive cover while in operation and make sure it is always closed.

8. Always remove chuck key, even when machine is not in operation.

9. Do not attempt to adjust or remove tools when in operation.

10. Always keep cutters sharp.

11. Never use in an explosive atmosphere or where a spark could ignite a fire.

12. Always use identical replacement parts when servicing.

WARNING: DO ALLOW FAMILIARILY (GAINED FROM FREQUENT USE OF YOUR LATHE) TO BECOME COMMONPLACE A CARELESS FRACTION OF A SECOND CAN ALLOW FOR SEVERE INJURY.

INDEX

TECHNICAL DATA OF THE CT-918A
CT-918AM

Center height	115 mm
Distance between centers	500mm
Max. dia. over slide	68mm
Required floor space	950 x 500 mm
Weight	95kg

Headstock: spindle nose morse taper No. 3
hollow spindle (inside dia.) 20 mm
spindle bearings: 2 adjustable precision taper roller bearings. # 32007

Spindle Speeds: 130, 300, 400, 600, 1000, 2000 rev/min (60Hz)

Longitudinal Feed (CT-918A) 0.004 inch/rev. (CT-918AM) 0.10 mm/rev.
0.008 inch/rev. 0.20 mm/rev.

Thread Pitches: (CT-918A) metric 0.5 - 3mm
inch 8 - 56 thread/inch
(CT-918AM) metric 0.4 - 3mm
inch 8 - 56 thread/inch

Tailstock:
spindle dia. 26 mm
spindle travel 40mm
morse taper MT-2

Motor:
speed 1720 rpm
capacity ¾HP

SETTING UP AND PREPARING FOR OPERATION OF THE MACHINE

To avoid twisting of the bed, care should be taken that the location to which the machine is bolted is absolutely falt and level.

Care must also be taken that the stand on which the machine is mounted is securely fastened to the floor, thus avoiding swing and working inaccuracies, the machine should be fixed with 2 hex-headed screws (M10, length to suit the thickness of table) firmly onto the stand.

The protecting oil film (for storage and transport) should be removed by washing with paraffin. After washing, clean with dry, soft cloth. Finally oil the slide ways with acid-free oil.

Before using the machine, the instruction book should be read throughly by its operator so that he is completely familiar and confident with the machine and its controls.

The Standard Equipment Includes:

Bed

Headstock

Saddle-, Cross-, Top-Slides

Tailstock

Reduction gear

Automatic feed with quadrant and 6 change wheels

Driving pin with nut

Driver

Center MT-3

Center MT-2

Single tool holder (Clamp)

Electrical equipment with motor etc.

Service manual

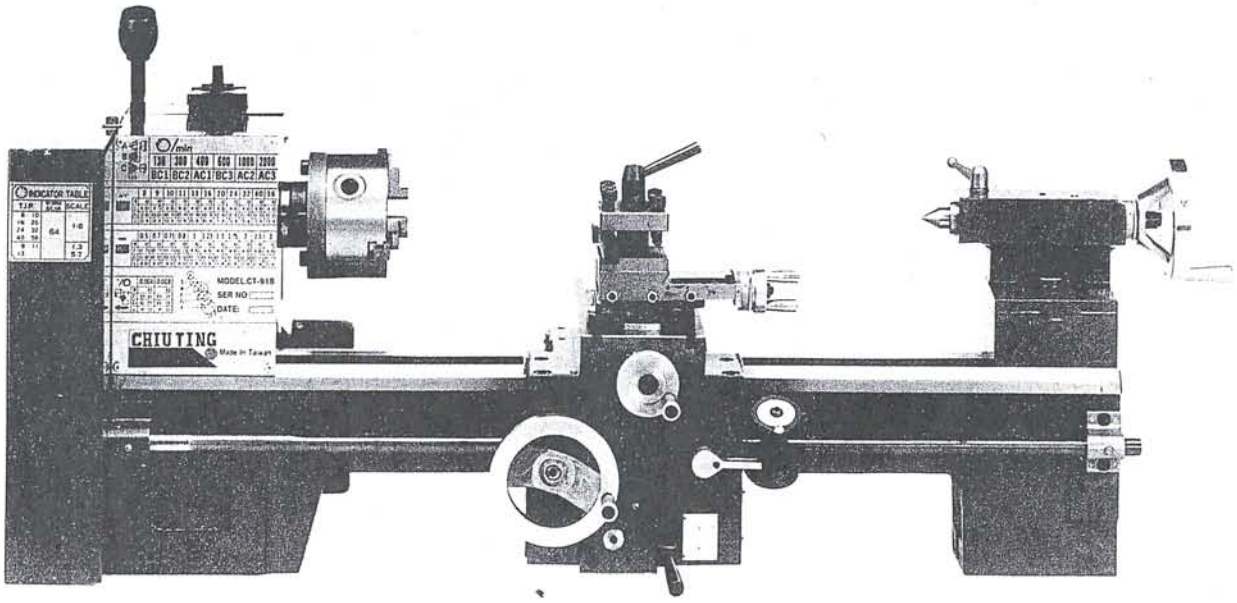

GENERAL DESCRIPTION

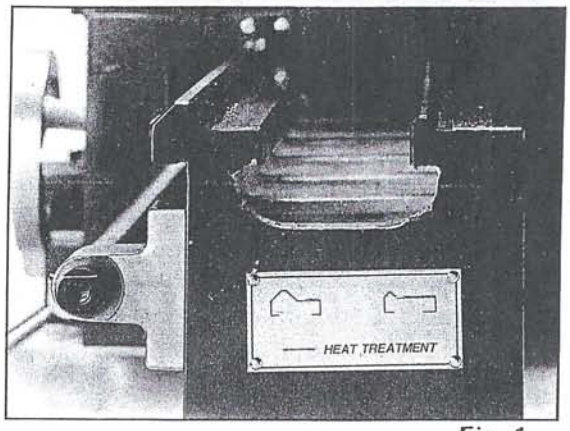

Fig. 1

Lathe Bed

The lathe bed is made of high-grade cast iron (FCD-25). By Combining high cheeks with strong cross ribs, a bed with low vibration and rigid qualities is produced. The two precision-ground vee slideways, re-enforced by precision heat-hardening and grinding, give an accurate guide for the carriage and tailstock, the main drive motor is mounted to the rear or the bed (Fig. 1)

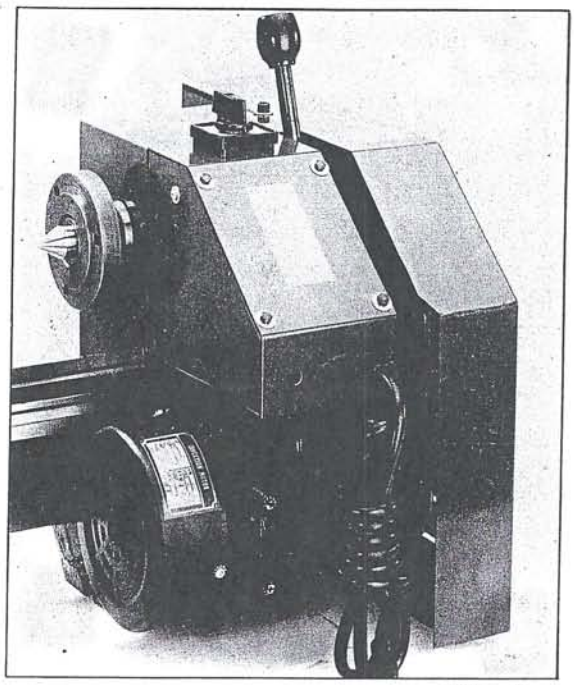

Fig. 2

Head Stock

The headstock is cast from high-grade low-vibration cast iron, it is bolted to the bed by 4 screws and 4 other fitting screws to adjust to true position. In the head, the large main spindle is mounted on 2 precision taper roller bearings (# 32007). The spindle has a hollow No. 3 Morse Taper socket with 20 mm inside diameter (Fig. 3)

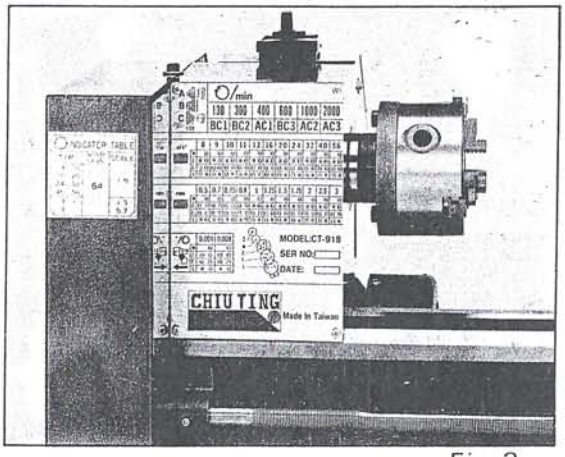

Fig. 3

A quick change of the belt can be made by easing the tension on the idler.

The type of belt used by CT-918A, CT-918AM has the great advantage that it is noiseless at all speeds and also capable of higher rotary speeds.

For the endurance of machine there is safety slide clutch assembled in the position of speed 130. It will auto switch off when over loading

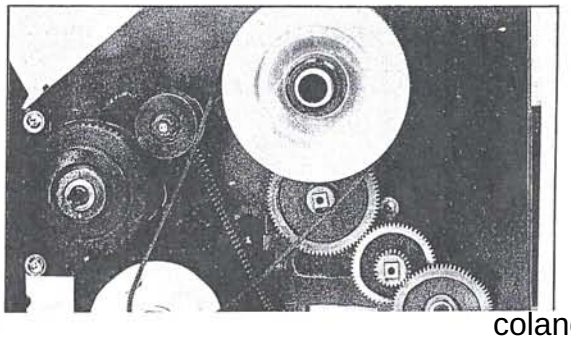

Slides

The strong carriage is made from high-quality cast iron. The sliding parts are smooth ground. (Fig. 1) It fits the vee on the bed without play. The lower sliding parts can be easily and simply adjusted. The cross-slide is mounted on the carriage and moves on a dovetailed slide which can be adjusted for play by means of gibstrips.
The travel of the cross slide is effected by means of the conveniently positioned cross spindle handwheel. There is a graduated collar on the handwheel. CT-918A (1 graduation = 0.0254mm), CT-918AM (1 graduation = 0.025mm).
The top slide, which is mounted on the cross slide, can be rotated through 360°. The top slide and the cross slide travel in a dovetail slide and have gibs, adjustable nuts and a graduated collar. CT-918A (1 graduation = 0.0254 mm). CT-918AM (1 graduation = 0.025mm)

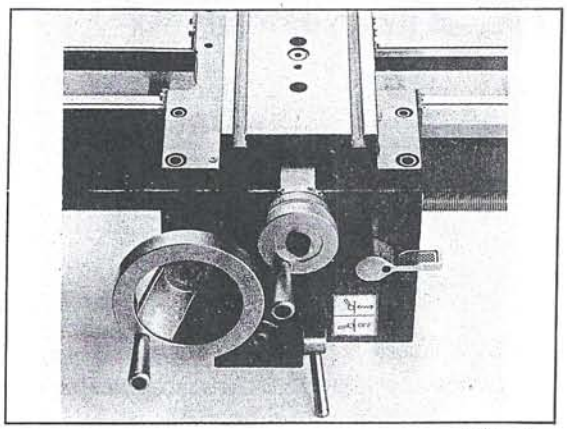

Fig. 1

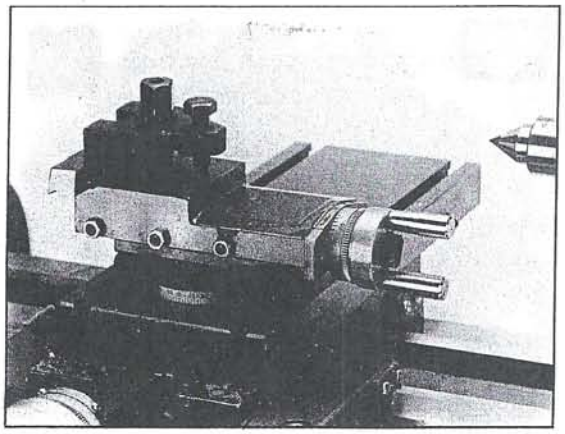

Fig. 2

When stopping carriage (Fig. 3) fasten screw 1 (in the right side of carriage M6)

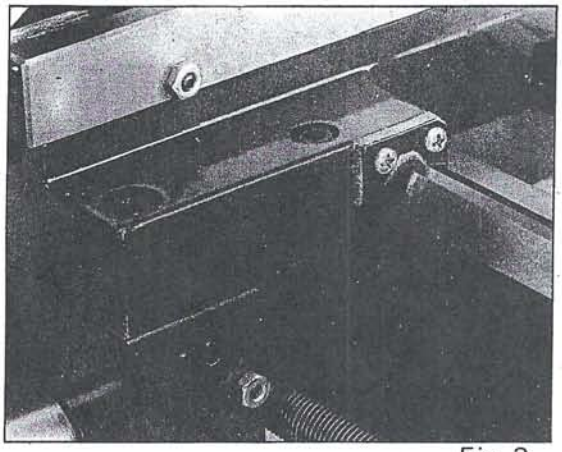

Fig. 3

Apron

The apron is mounted on the long slide, in the apron the two-piece half-nut is fitted, and can be adjusted from the outside.
The half-nut can be engaged by use of a conveniently placed lever. The quick-travel of the long slide is by menas of a rack which is mounted on the bed, and a pinion, operated by a handweel mounted on the carriage within easy reach.

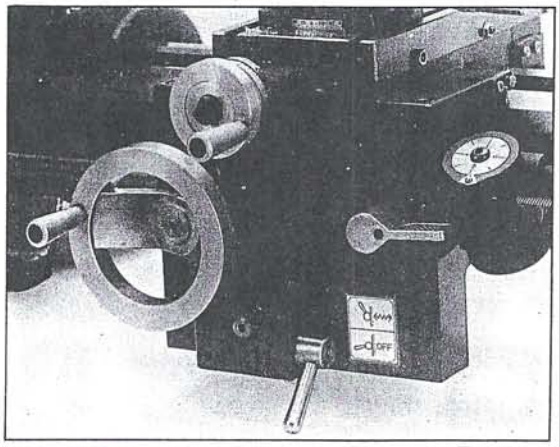

Fig. 4

Tailstock

The tailstock slides on a vee and can be clamped in any position by means of a heavy screw. (Fig. 1) The tailstock has a heavy-duty barrel with No 2 Morse Taper socket and a graduated scale. The barrel can be clamped in any position by means of a clamping lever. The barrel is moved axially by means of a handwheel mounted on the rear end of the tailstock.

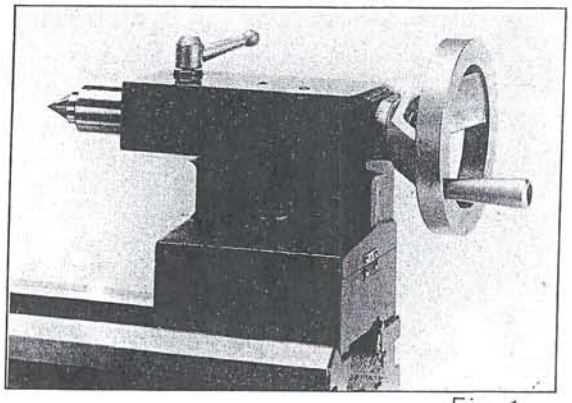

Fig. 1

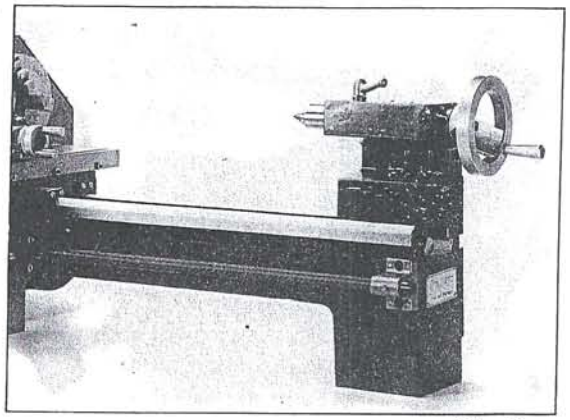

Fig. 2

Leadscrew

The heavy leadscrew is mounted on the front of the machine bed. It is connected to the gear box at the left for automatic feed and is supported by heavy bearings on both ends. The nut and set screw on the right end of lead screw are to take-up play on lead screw. (Fig. 2)

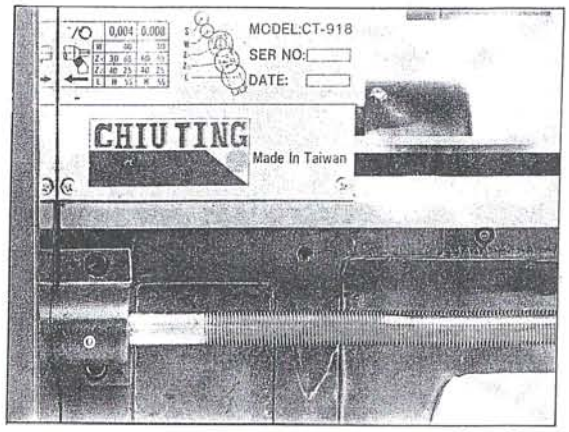

Fig. 3

Drive and Electrical Equipment

The main drive is by a single phase A.C. motor, mounted on the rear of the lathe bed.
The auto-switch is mounted on the top of the box. The motor condenser is also contained in the box. (Fig 4)

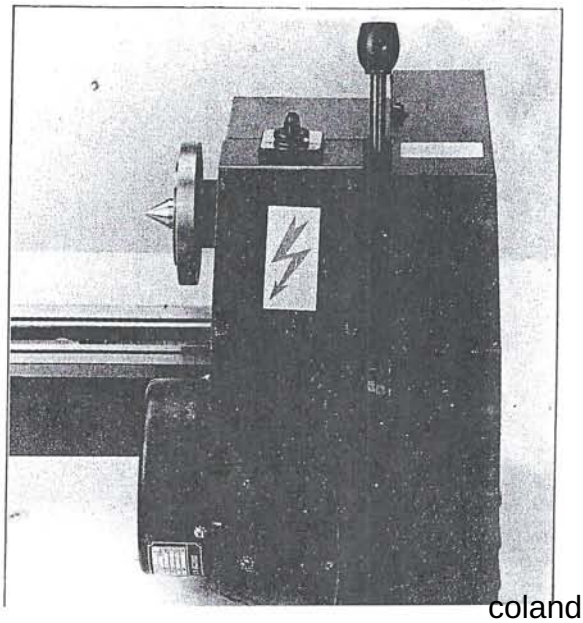

CONTROLS

1. Main switch for motor (forward and reverse)
2. Lever for adjusting tension of the Vee belt
3. Long travel handwheel
4. Half-nut lever
5. Cross slide handwheel
6. Top slide handwheel
7. Long travel clamping screw
8. Four way tool holder
9. Tailstock barrel handwheel
10. Tailstock barrel clamping lever
11. Tailstock locking screw
12. Tailstock cross adjustment
13. Fixing screw for drive cover
14. Automatic feed lever

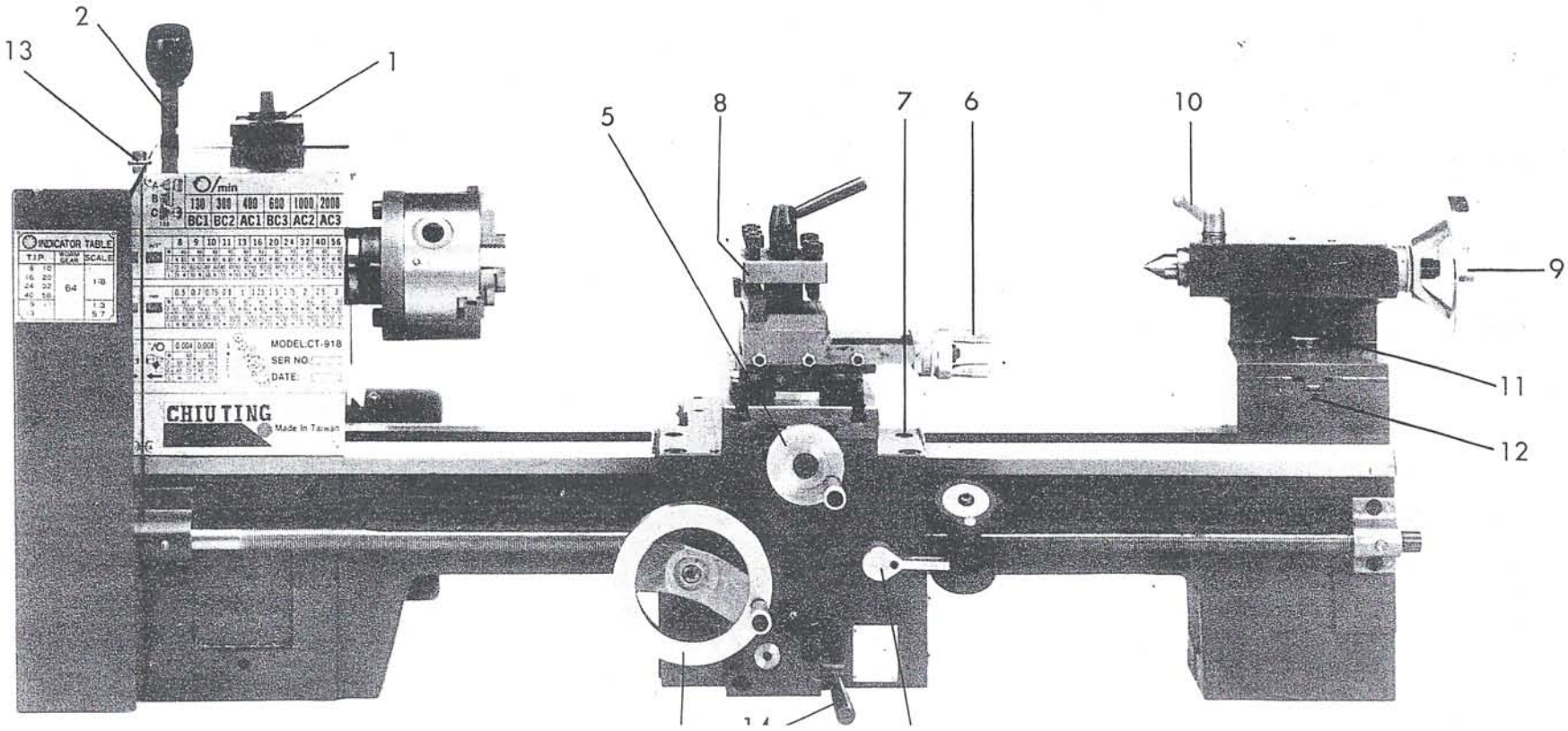

WORKING WITH THE CT-918A or CT-918AM

Setting the Turning Tool

The cutting angle is only correct when the cutting edge is in line with the center axis of the work piece. The correct height of the tool can be achieved by comparison with the point of the center mounted in the tailstock. The correct height can be obtained by using shims under the tool. (Fig. 1)

For the best results the overhang should be kept to a minimum of 10mm. If pre overhang is greates than this it will tend to flex or bend when under bad.

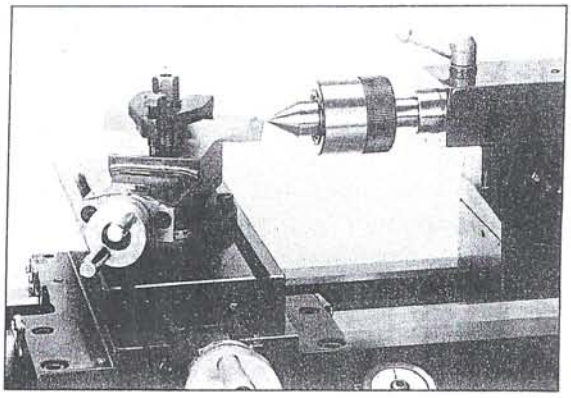

Fig. 1

Manual Turning

The long travel-, cross travel-, top slide-handwheels can be operated for longitudinal or cross feeding (Fig. 2)

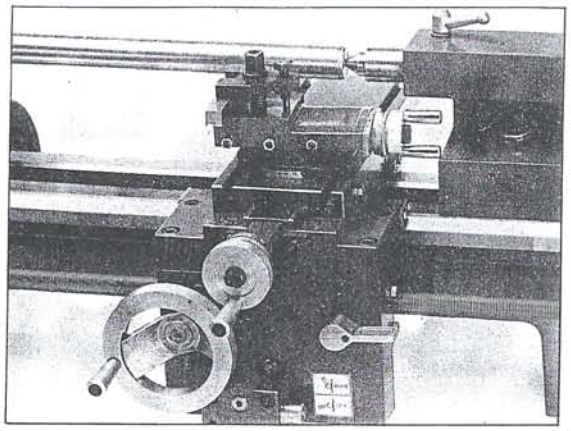

Fig. 2

Longitudinal Turning with Auto-Feed

Two automatic feeds are available CF-918A (fine = 0.004 inch/rev., rough = 0.008 inch/rev.) CT-918AM (fine = 0.10 mm/rev., rough = 0.20 mm/rev.) these can be obtained by altering the gear wheel combinations (see table). (Fig. 3)

By moving the axial downward and engaged with the leadscrew, the automatic feed is in operation.

	0.004		0.008	
W		40		40
Z1	60	80	75	70
Z2	55	25	65	30
L	H	80	H	60

Fig. 3

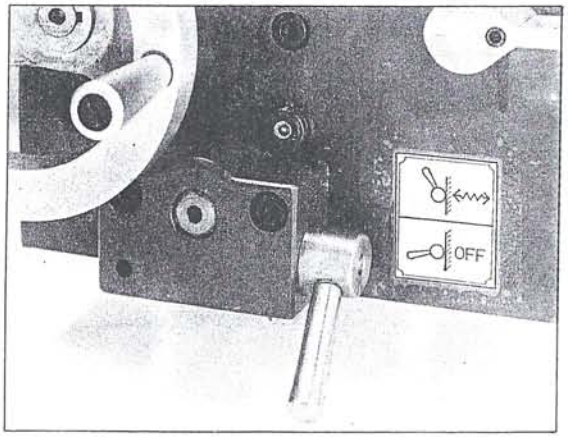

Fig. 4

Taper Turning Using Tailstock Set- Over

Work to a side angle of 5° can be turned by setting over the tailstock (the angle depends on the length of the workpiece) (Fig. 1)
To set over the tailstock, slacken the locking screw 1. unscrew the front adjusting screw 2. screw in the rear adjusting screw 3 until the required taper has been reached tighten the front screw to lock the tailstock in position. The workpiece must be held between two centers and drive by driving plate and driver.
After taper turning, the tailstock should be returned to its original position. The zero position of the tailstock is checked by turning a test piece with constant adjustment until the piece is absolutely cylindrical.

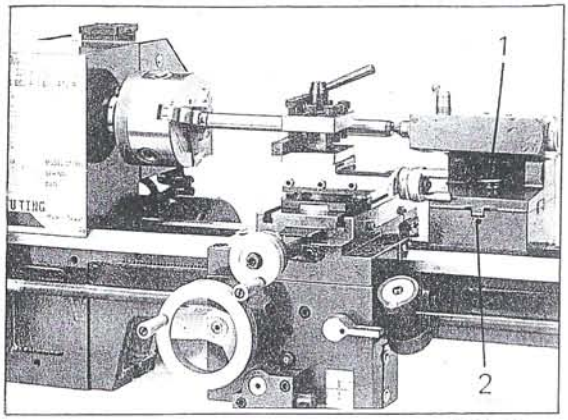

Fig. 1

Taper Turning By Setting The Top Slide

By angling the top slide, taper can be turned. (Fig. 2)
Rotating the top slide:
After loosening the two screws 1, the top slide can be rotated, a graduated scale permits accurate adjustment of the top slide. This method can only be used for short tapers.

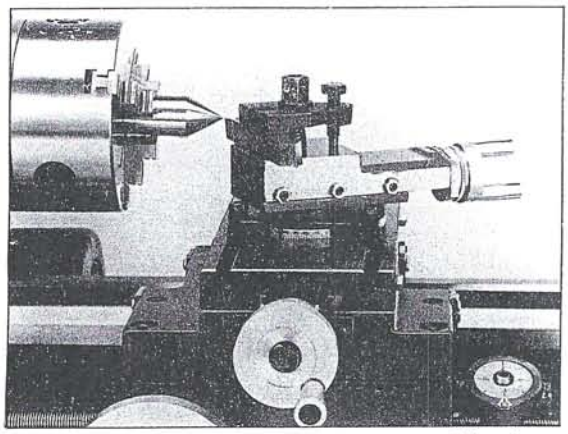
Fig. 2

Turning Between Centers

For turning between centers it is necessary to remove for the chuck from the spindle. It is held by three hex-headed nuts M8, (Fig. 3)

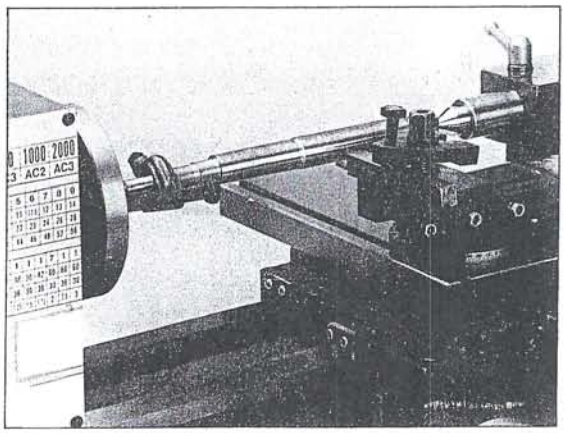
Fig. 3

Screw Cutting (With Change Wheels)

By changing the combination of gear wheels, it is posible to cut metric, inch and module threads. Please refer to the table when changing and be sure that as an aid in mounting that a strip of paper should be placed between the meshing teeth. For inch threads please refer to the thread cutting table (Fig. 4) or (Fig. 5)

It is essential that the half-nut should remain closed throughout the threading operation so that the tool always returns to the correct starting position. The tool should be withdrawn by use of the cross slide and the carriage returned to the starting position by reversing the motor.

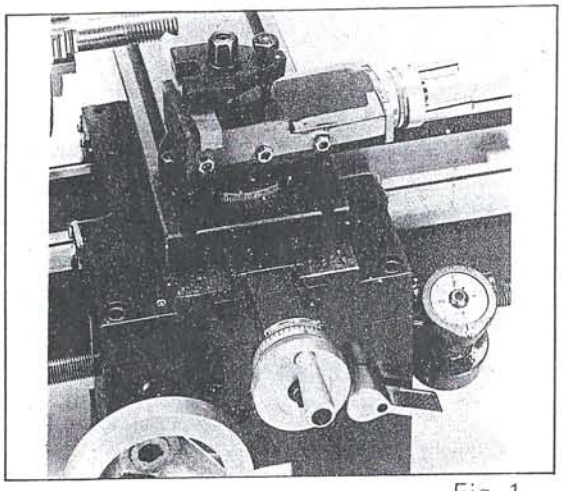

Fig. 1

Example of Mounting the Gear Wheels for CT-918A 16 Thread/Inch

1. Loosen the screw 1. (Fig. 3)
2. Loosen bolt (2), remove washers (3) and bushing (6).
3. Loosen nuts (7) to the set position.
4. Loosen nut (5) remove washer (4) and gear (8).

Assembling Gear Wheels

1. Set gear (30 teeth) at the position of Nut No. 7 and then set gear (60 teeth) and washer No. 4
2. Set first bushing and gear (80 teeth) at the position of bolt No. 2

Be sure that all ntus are tight when assembling.

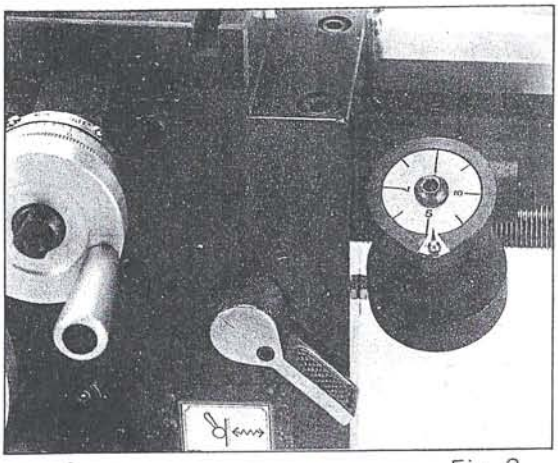

Fig. 2

Slipping Clutch

To avoid the overloading of the drive, a safty-slipping clutch is fitted on the position of speed 130 RPM. Overloading the drive (rattling noise) means the depth of cut is too deep and should be reduced.

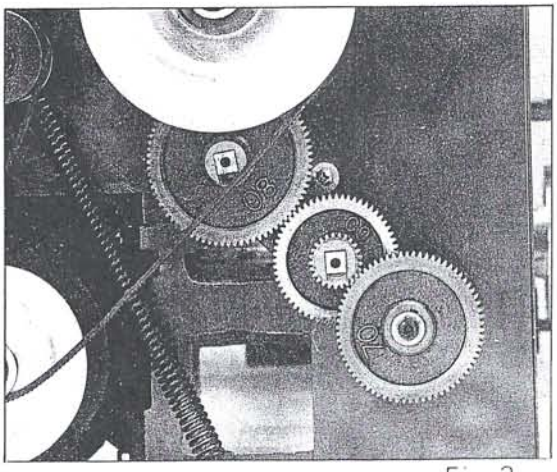

Fig. 3

CT-918AM
Leadscrew = 1.5 pitch

INDICATOR TABLE		
PITCH	WORM GEAR	SCALE
0.5 0.7 1.5 1.75	56	1—8
1.0 3.0		1 , 3 5 , 7
0.4 2.0		2 , 6
0.8		3

CT-918A
Leadscrew = 16 thread/inch

INDICATOR TABLE		
T. P. I	WORM GEAR	SCALE
8 10 16 20 24 32 40 56	64	1- 8
9 11		1 , 3

Thread Cutting Table

(CT-918A) INCH

n/1"		8	9	10	11	13	16	20	24	32	40	56
	W	40	40	40	40	40	40	40	40	40	40	40
	Z1	H 80	H 70	H 80	H 80	H 80	H 80	H 80	H 80	H 80	H 80	H 80
	Z2	70 40	80 60	80 40	80 40	80 40	60 30	60 40	50 40	35 40	30 40	30 60
	L	35 H	30 H	50 H	55 H	65 H	80 H	75 H	75 H	70 H	75 H	70 H

METRIC

mm		0.5	0.7	0.75	0.8	1	1.25	1.5	1.75	2	2.5	3
	W	40	40	40	40	40	40	40	40	40	40	40
	Z1	65 75	60 75	65 75	60 70	H 60	H 80	H 80	H 80	H 80	H 80	H 80
	Z2	55 40	80 55	80 60	75 55	65 75	65 60	65 50	55 50	55 50	65 55	65 55
	L	H 80	H 50	H 55	H 50	55 H	55 H	55 H	40 H	35 H	30 H	25 H

(CT-918AM) METRIC

mm		0.4	0.5	0.7	0.8	1.0	1.25	1.5	1.75	2.0	2.5	3.0
	W	40	40	40	40	40	40	40	40	40	40	40
	Z1	H 80	H 80	H 80	H 80	H 80	H 80	H 80	H 80	H 80	H 80	H 80
	Z2	30 60	40 60	35 60	40 60	50 40	50 40	75 60	70 60	80 60	75 60	75 60
	L	75 H	80 H	50 H	50 H	75 H	60 H	50 H	40 H	40 H	30 H	25 H

INCH

n/1"		10	11	13	19	20	22	40	44
	W	40	40	40	40	40	40	40	40
	Z1	H 80	H 80	H 80	H 80	H 80	H 80	H 50	H 60
	Z2	55 20	50 20	65 40	50 30	55 40	50 40	55 80	50 80
	L	65 H	65 H	50 H	75 H	65 H	65 H	65 H	65 H

CT-918A = Leadscrew 16 thread/inch
CT-918AM = Leadscrew thread 1.5 pitch
INCH = Thread inch
METRIC = Thread metric
S = main spindle
W = idler
Z1 = 1st intermediate shaft
Z2 = 2nd intermediate shaft
L = leadscrew
H = distance bush

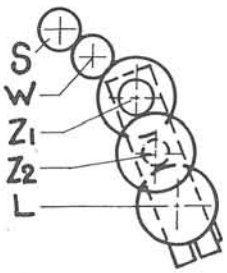

LATHE ACCESSORIES

Universal Lathe Chuck, 3 or 4 Jaw Design

Using these universal chucks, cylindrical or symmetrically profiled work pieces (Round stock, triangular, square, hexagonal, octagonal or twelve-cornered stock) can be clamped (Fig. 1)
Note: New lathe chucks have very tightly fitting jaws this is of vital necessity to ensure accurate clamping and a long service life. With repeated opening and closing the jaws. adjust themselves automatically and their operation becomes progressively smoother.

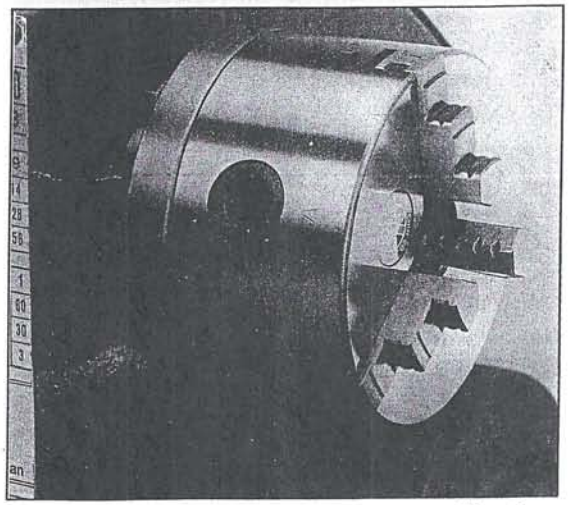

Fig. 1

4 Jaw Independent Chuck

This special chuck has 4 independently adjustable chuck jaws. These permit the holding of asymmetrical components and enable the accurate setting up of cylindrical components. (Fig. 2)

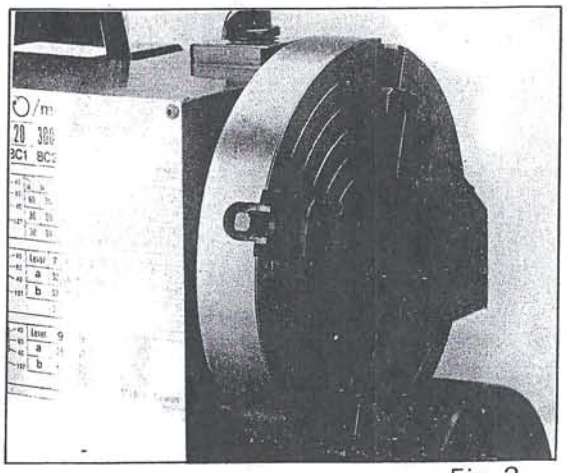

Fig. 2

Drill Chuck

With its three self-centring jaws it is used for holding centring drills and twist drills on The Tail end (Fig. 3)

Morse Taper Arbor

The arbor is necessary for mounting the drill chuck in the tailstock or vertical attachment spindle, it has a No. 2 morse taper (Fig. 3)

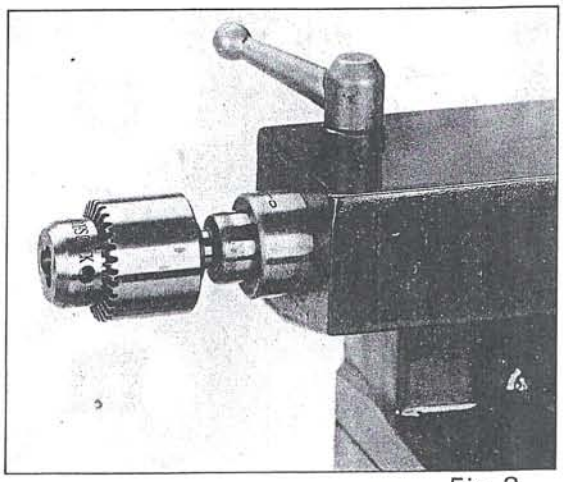

Fig. 3

Live Center

The live center is mounted in ball bearings, its use is highly recommended for turning at speed in excess of 600 RPM. (Fig. 4)

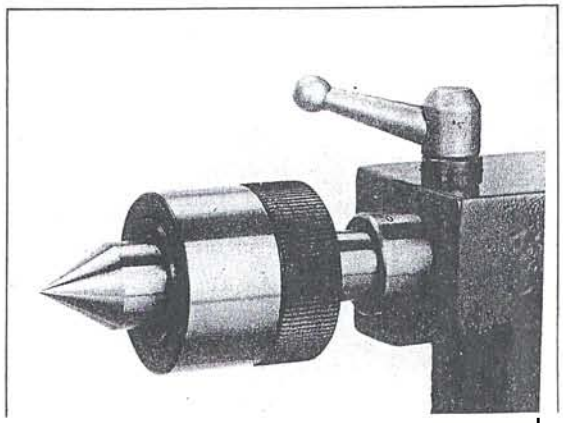

Center Steady Rest

This center steady rest serves predominantly as a support for shafts on the free tailstock end. For many operations the tailstock cannot be used as it obstructs the turning tool or the drilling tool, and therefore must be removed from the machine. It is then the center steady rest, which functions as end support ensuring a chatter-free running of the machine is used. The center steady rest is mounted on the bedway and secured from below in the desired position by means of a locking plate. The sliding fingers require continuous lubrication at the contact points with the workpiece to prevent their premature wear. (Fig. 1)

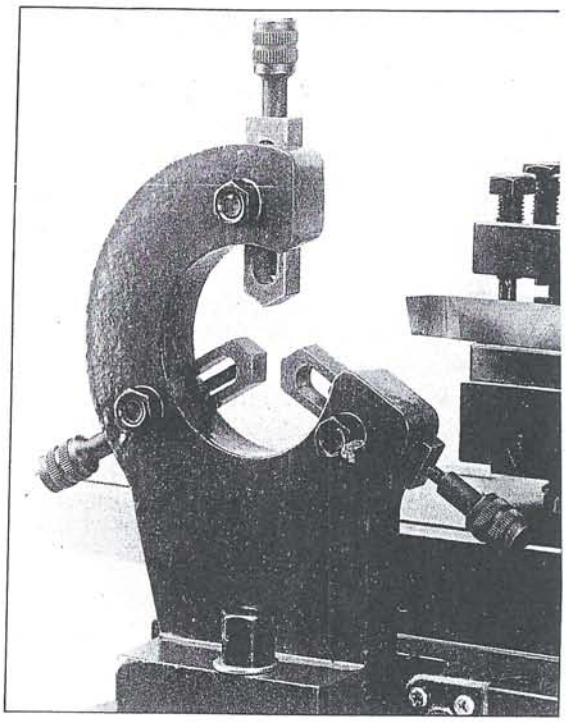

Fig. 1

Travelling Steady Rest

The travelling steady is mounted on the saddle and thus follows the movement of the turning tool, only two sliding fingers are required, as the place of the third is taken by the turning tool. The travelling steady is used for turning operation on long, slender workpieces. It prevents "spring" of workpiece under the pressure of the turning tool. (Fig. 2)
The sliding fingers are set similarly to those of the center steady, free of play, but not binding, they should be adequtely lubricated during operation.

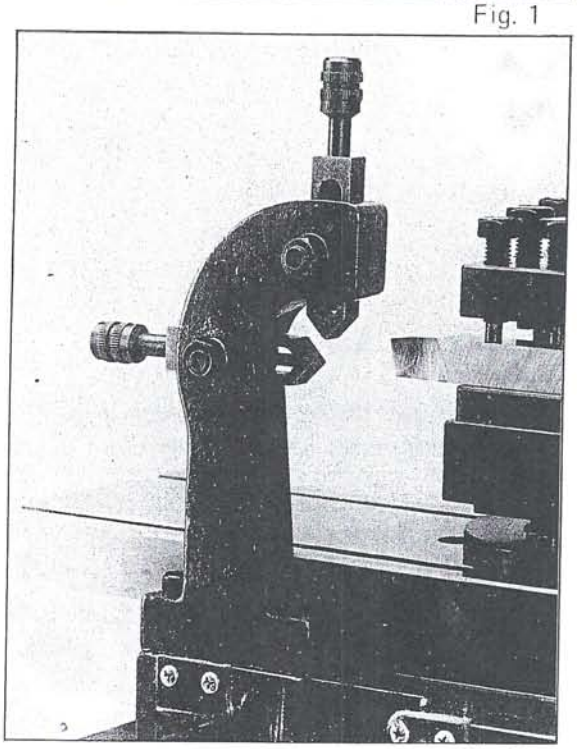

Fig. 2

Setting The Steady Rest

1. Loosen the three laterally located hexagonal nuts (Fig. 3)
2. Unscrew the knurled screw 3 and open the sliding fingers 2 by hand sufficiently wide until the steady rest can be moved with its fingers around the workpiece. Secure the steady rest in its position.
3. By turning the knurled screws into position, the sliding fingers can be set to the workpiece, they must be applied free of play but must not be too tight. Tighten the hexagonal nuts. Lubricate the sliding points with machine oil.
4. When after prolonged operation time the jaws show

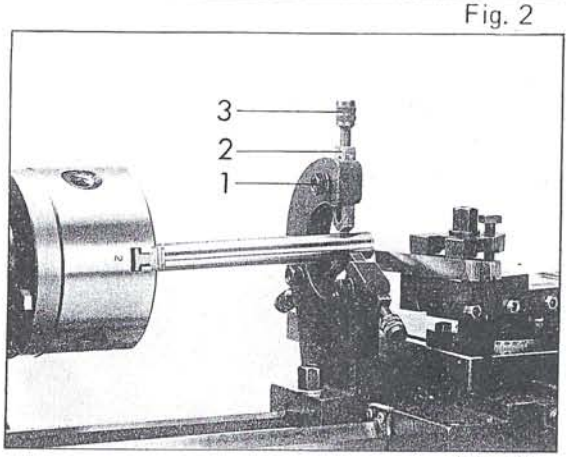

Fig. 3

Tool Post

Tool post is mounted on the top slide. The tool 1 can be positioned where desired and then locked in place with 3 point clamp with forked end 2 holding tool. Tighten clamp nut 3 and level 3 point clamp with set screw 4 . (Fig. 1)
NOTE: Always mount tool cutting edge as close to tool post as possible to avoid deflection of tool.

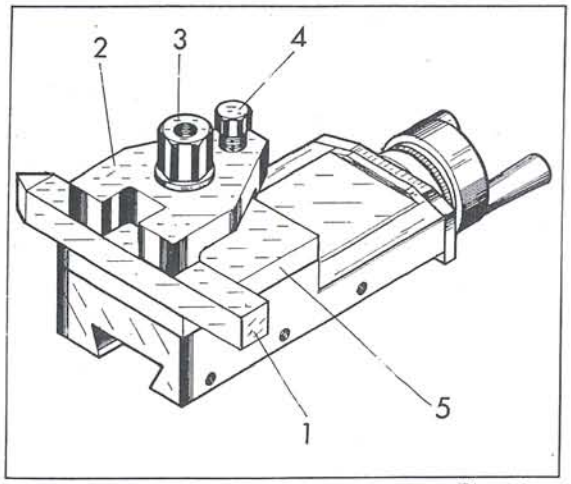

Fig. 1

Four-Way Tool Post (Optional)

It is mounted on the top slide and allows four tools to be clamped. Simply loosen the center clamp handle 4 to rotate any of four tools into position (Fig. 2).

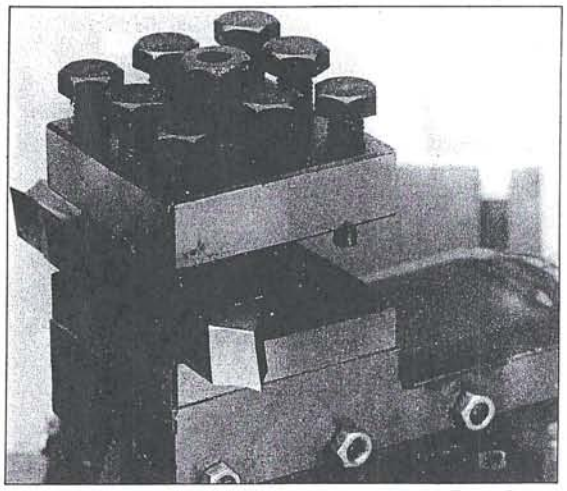
Fig. 2

To Install Four-Way Tool Post

Remove standard 3 point clamp and nut, plate 5, (Fig. 1). Install top plate 1, (Fig. 3) onto stud, follow with clamp handle 2. Install cutting tools with a minimum of two clamp screws (Fig. 2)
NOTE: Always mount tool cutting edge as close to tool post as possible to avoid deflection of tool.

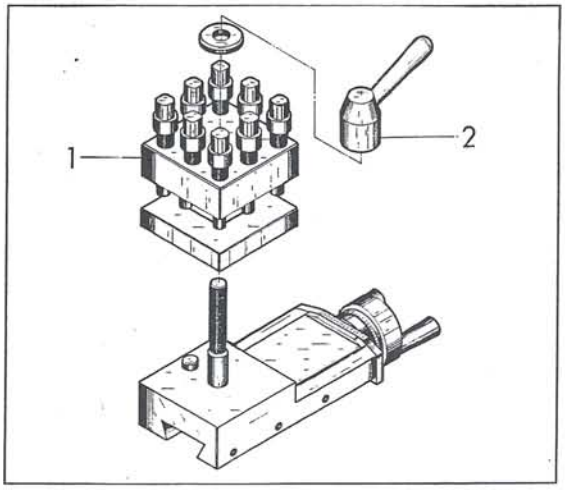

Fig. 3

Chip Guard

Travels with the tool and protects the operator from flying shaving. It is also sufficient protection against damage from a tool breaking in use. (Fig. 1)

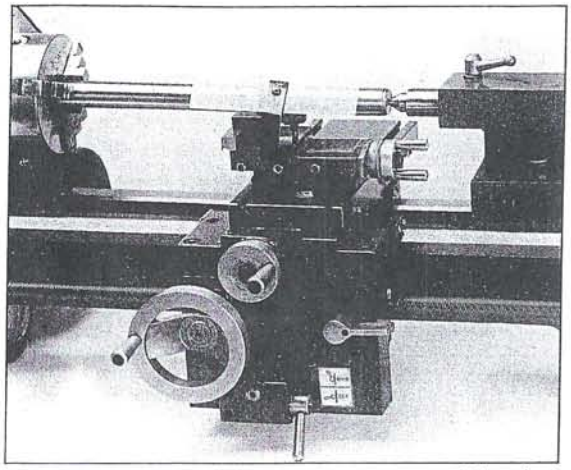

Fig. 1

Gear Change CT-918A or CT-918AM

There are 6 gears each having a different number of teeth CT-918A (80, 80, 55, 50, 40, 35, 25)., CT-918AM (80, 80, 55, 50, 40, 35, 25, 20). They can be combined for different speeds and feeds as required. See chart on headstock for desired combinations. (Fig. 2)

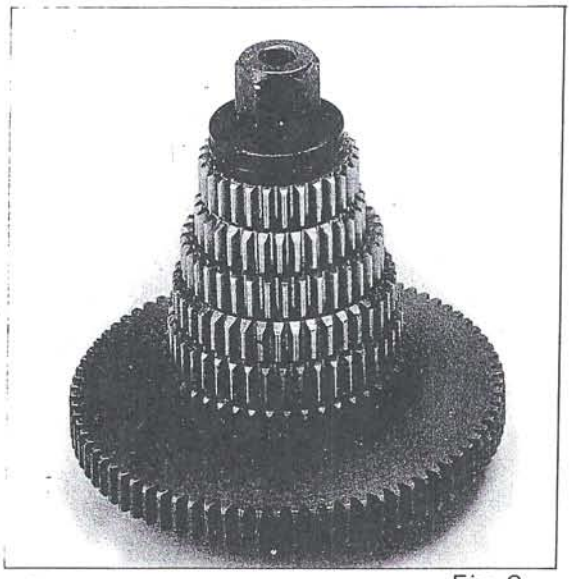

Fig. 2

Cabinet Stand

The optional cabinet stand is designed exclusively for the CT-918 Lathe, made of plate style construction. There are under head can be used as storage for cooling agent. The center poction of the stand has a built in tool box (Fig. 3)

Fig. 3

BEARING AND SLIDE ADJUSTMENT

Adjustment of Main Spindle Bearings

The mainspindle bearings are correctly adjusted at the factory. If end play becomes evident after considerable, use, the bearings can be adjusted by slacking the grub screw 1 in he slotted nut 2 on the back end of the spindle and tighten the slotted nut until all end play is taken up, but still allowing the spindle to revolve freely. (Excessive preloading will damage the bearing). Tighten grub screw. (Fig. 1)

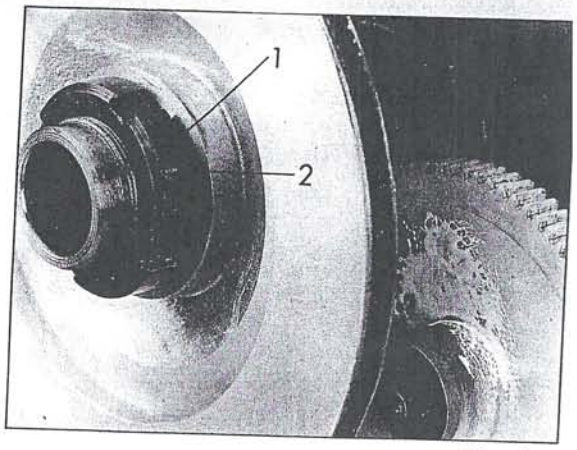

Fig. 1

Adjustment of Cross and Top Slides

Each slide is fitted with a gib strip witch can bé adjusted with screws 1 fitted with lock nuts 2 (Fig. 2) the gib strip is adjusted with screws until the slide moves freely without play, after which the lock nuts are tightened.

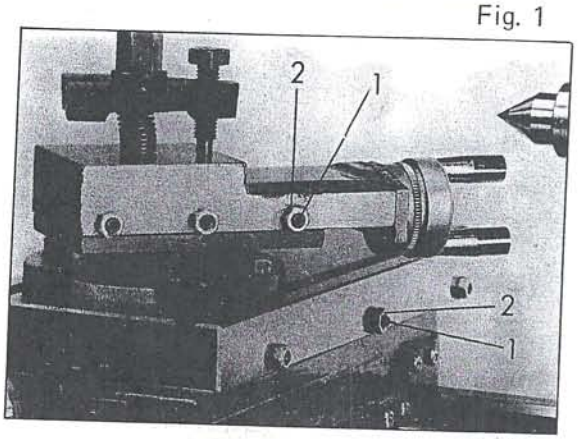

Fig. 2

Adjustment of Feed Screw End Float

Adjustment of slides on the saddle: (Fig. 3) loosen screw 1 and lock nut 2 until there is proper space for easy operation. Then set screw D.

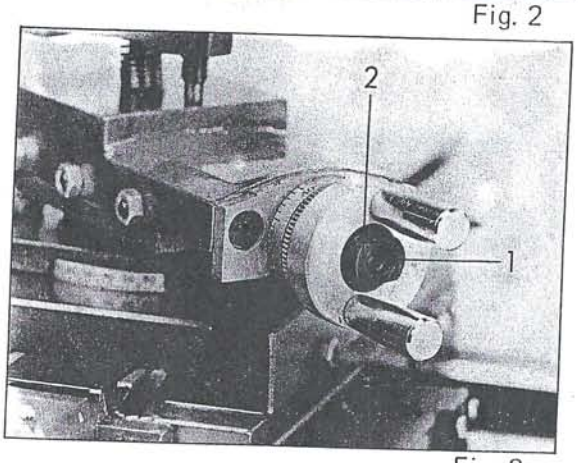

Fig. 3

FEED SCREW BACKLASH ADJUSTMENT

Cross Slide Spindle

Remove the top slide (Fig. 4) and adjust screw 1 until the backlash between the spindle and nut is eliminated.

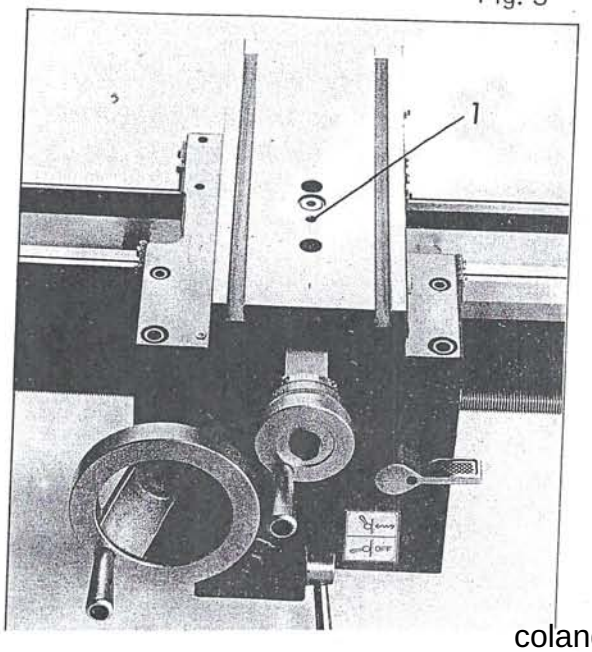

Top Slide Spindle Backlash Adjustment

Remove the 2 screws holding the spindle bracket in position and unscrew the spindle, adjust the screw ring 1 until all backlash has been eliminated. (Fig. 1).

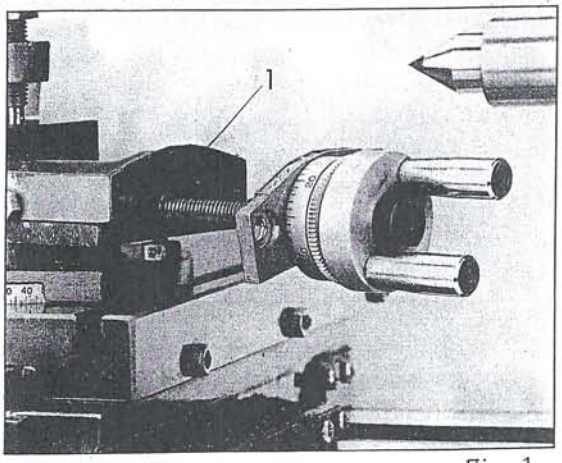

Fig. 1

Adjustment of Half-Nut Guide

Loosen the two hex nuts 1 on the right hand side of the apron and adjust the control screws 2 until both half-nuts move freely without play, tighten both hex nuts again. (Fig. 2)

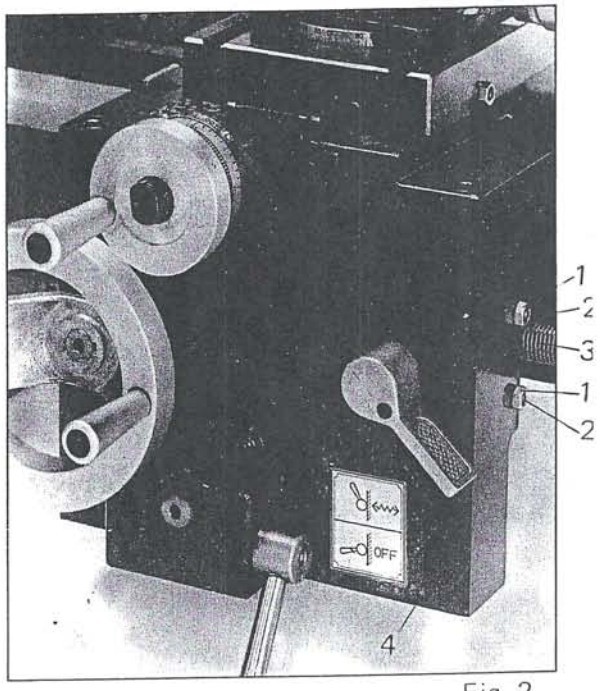

Fig. 2

Adjustment of Leadscrew Backlash

Loosen the grub screw 4 which is on the underside of the apron until backlash between The half-nuts and lead screw 3 is eliminated.

Replacing The Shear Pin In The Leadscrew

If the shear pin breaks due to overload or abuse, it must be replaced. (Fig. 3)

In order to check for a broken pin, the hex headed screw must be loosened and the pinion removed. Take off the sleeve and remove the broken pin from the sleeve and leadscrew. Replace the sleeve, line up the holes and fit new pin and reassemble.

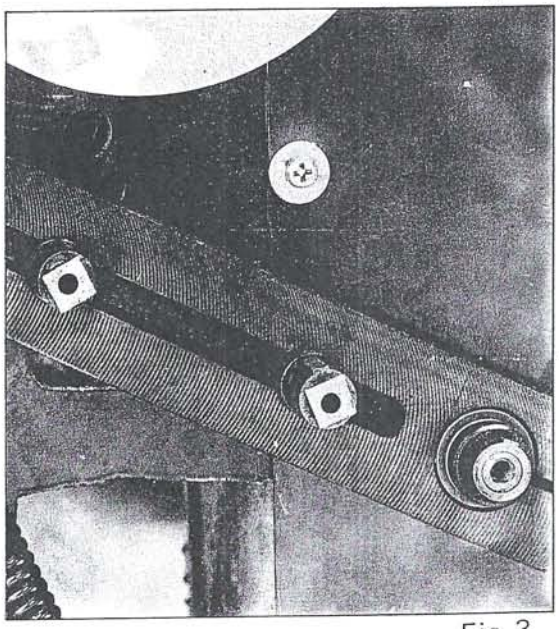

Fig. 3

Re-Positioning The VEE-Belt

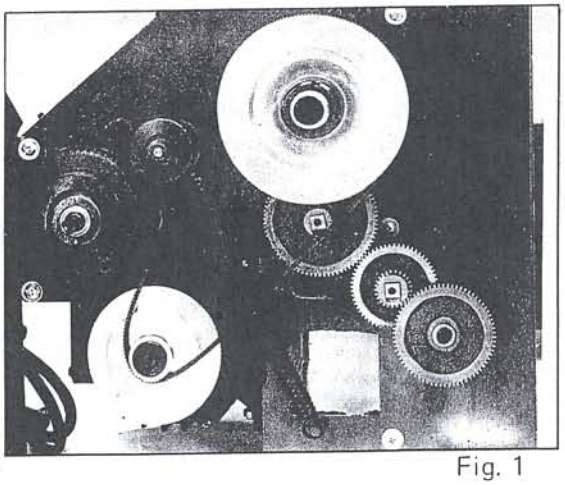

Fig. 1

Loosen the screw on top of the headstock and open the cover.
When re-positioning the belt it is necessary to slacken the idler. That is achieved by moving the lever in the direction of the headstock. Then the belt can be positioned on the required step. By moving the lever in the direction of the motor, the belt is tensioned. Close the cover and secure with screw.

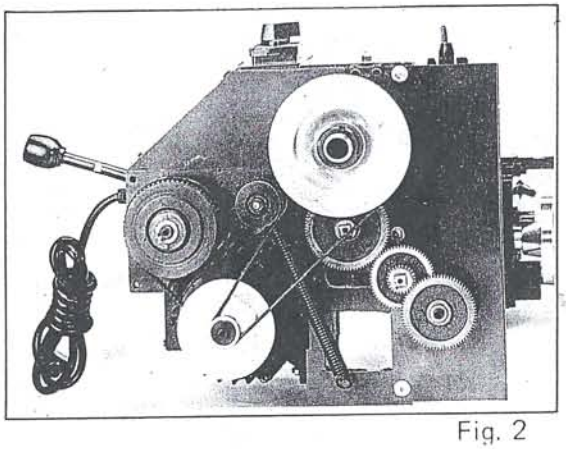

Fig. 2

Note: To aviod breaking of belt move the tension lever towards you before starting.

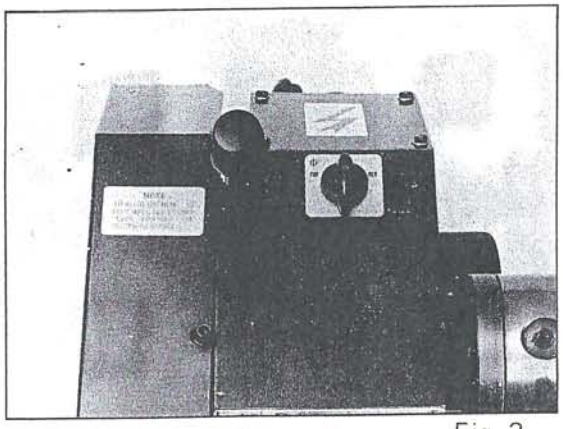

Fig. 3

	↻/min					
A	130	300	400	600	1000	2000
B	BC1	BC2	AC1	BC3	AC2	AC3
C						

LUBRICATION PLAN

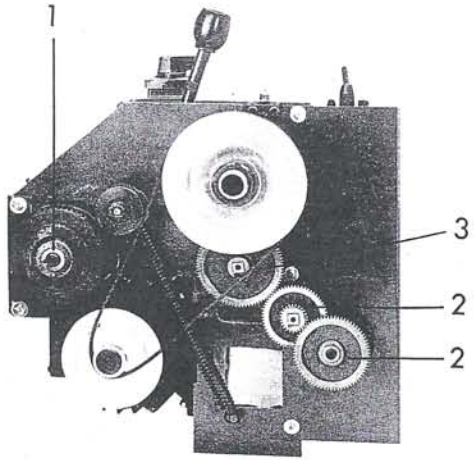

No.	Interval	Position	Grease	Oil
	Daily			
1	"	Oil nipple		●
2	"	Feed gear: change gears	●	
3	"	Teeth - oil		●
4	"	Bed ways: clean and oil		●
5	"	Rack: grease over complete length	●	
6	"	Leadscrew: clean and oil over complete length		●
7	"	Right hand bracket of leadscrew		●
8	"	Top slide: guides and screw		●
12	"	Left hand bracket of leadscrew		●
13	"	Apron automatic feed lever	●	
14	"	Oil nipple		●
9	Every 1000 working hours	Tailstock barrel (grease nipple)	●	
10	"	Carriage: grease nipple		●
11	"	Fed by carriage grease nipple No.11		

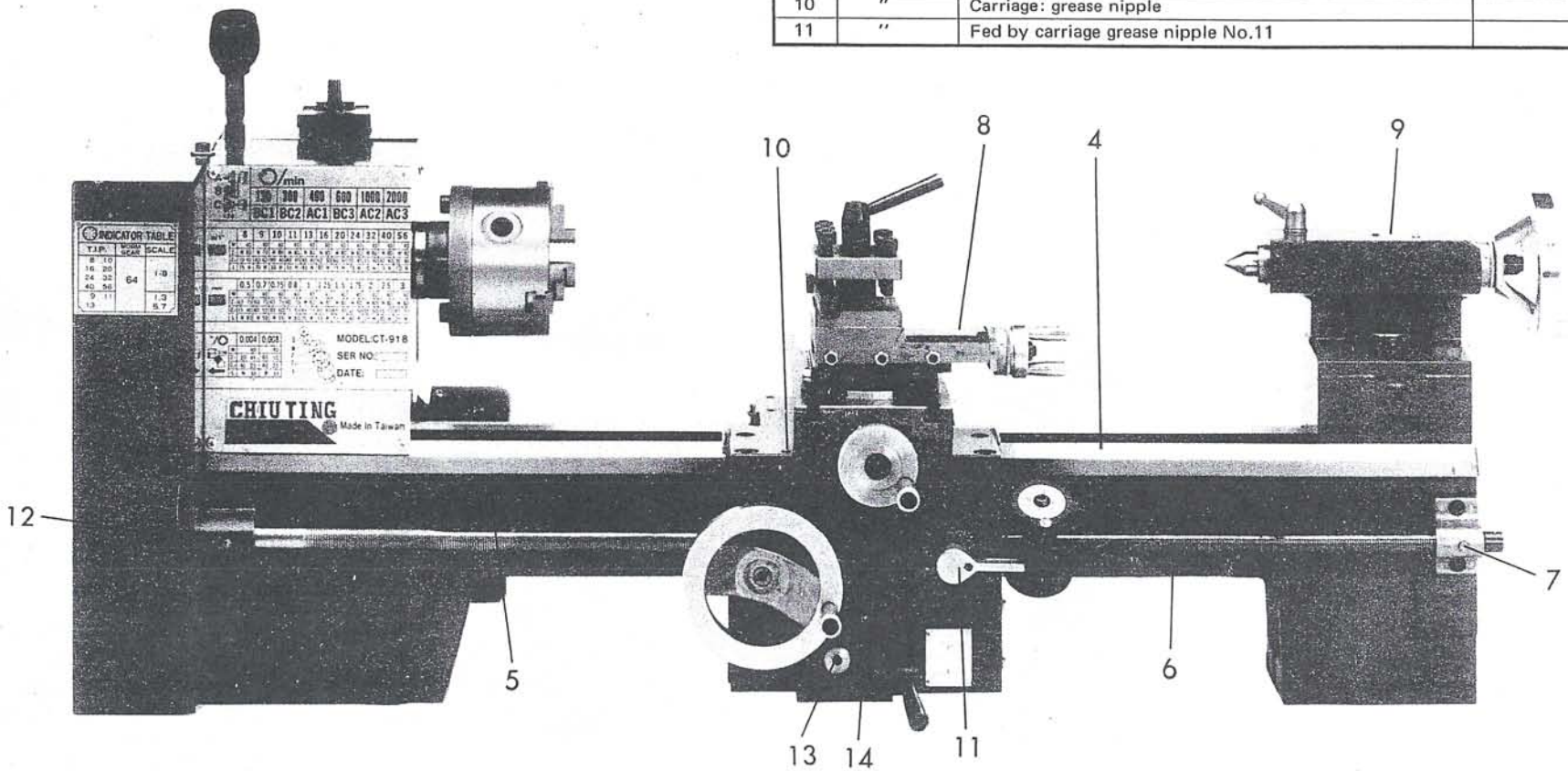

WIRING DIAGRAM

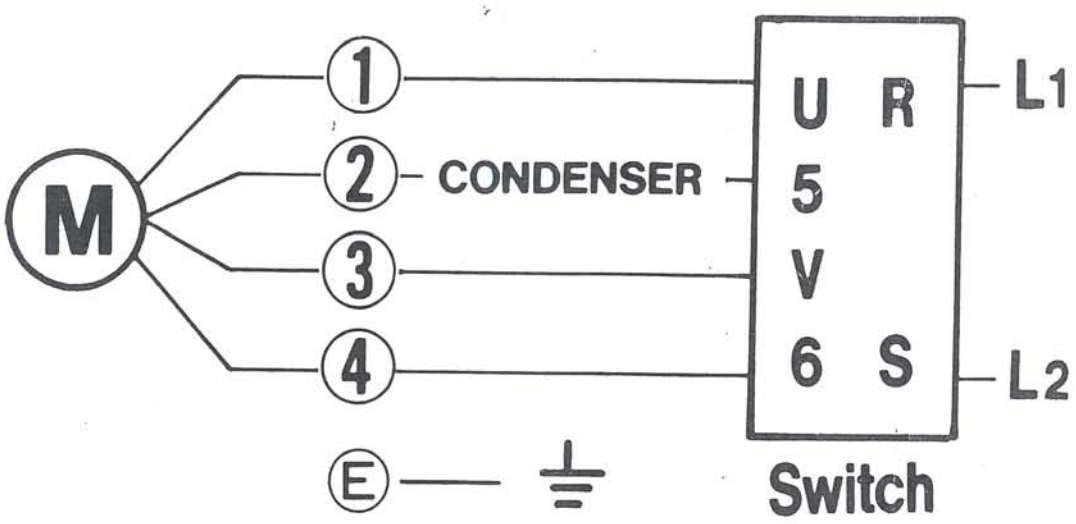

SERVICETEILE

SERVICE PARTS

PIECES DE SERVICE

INDEX:

HEADSTOCK

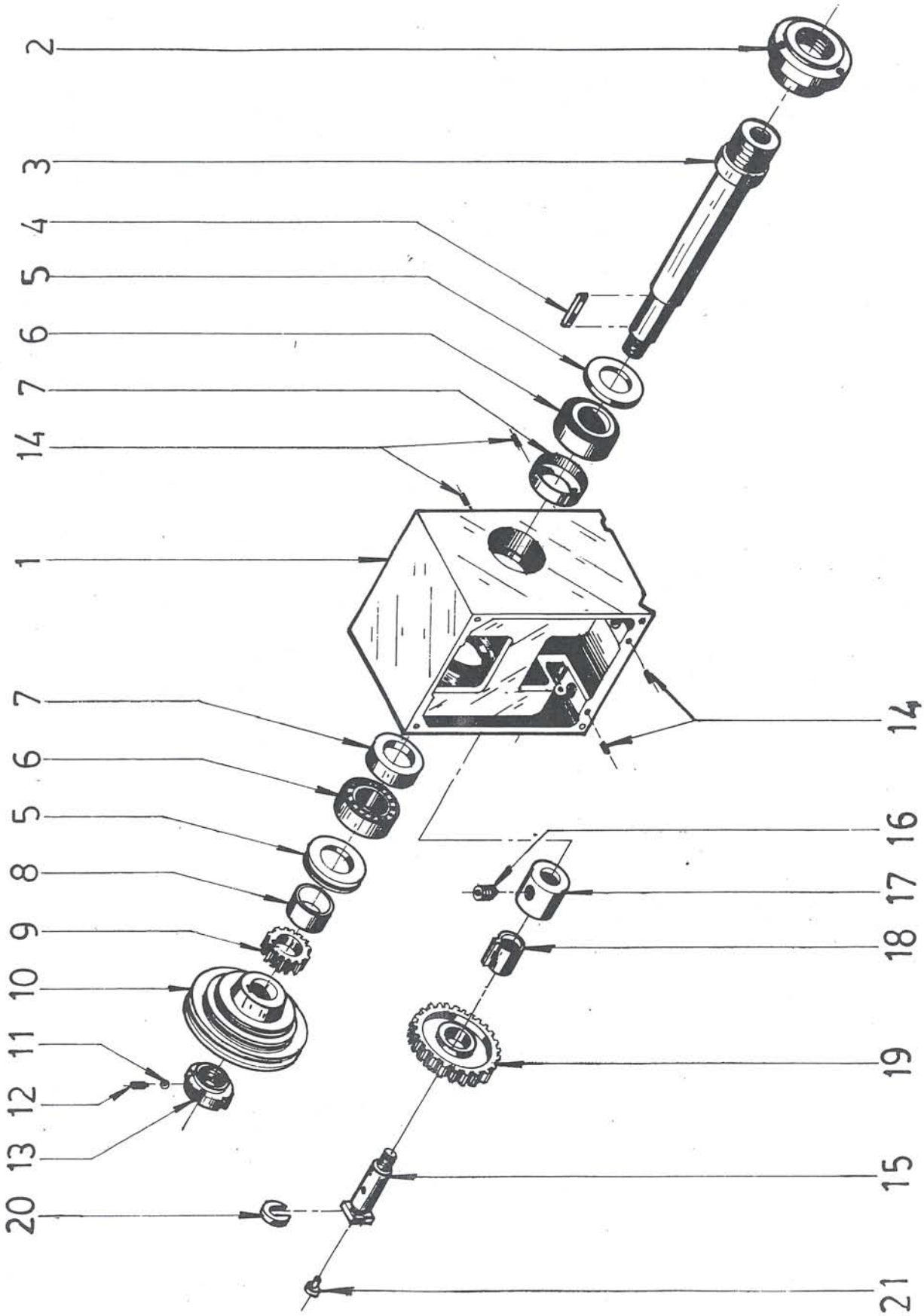

HEAD STOCK

INDEX NO.	PARTS NO.	PARTS NAME	QTY	REMARK
1	0001	Headstock	1	
2	0002	Flange Joint	1	
3	0003	Spindle	1	
4	0003-1	Key	1	
5	0004	Gasket	2	
6		Bearing	2	#32007
7	0005	Cover	2	
8	0078	Spacing Ring	1	
9	0007	Gear	1	40T
10	0077	Pulley	1	
11	0008-1	Bush	1	
12		Set Screw	1	M4x4
13	0009	Nut	1	M28
14		Set Screw	4	M4x12
15	0010	Shaft	1	
16	0011	Spacing Ring	1	
17		Set Screw	1	M5x5
18	0012	Bush	1	
19		Gear	1	40T
20	0014	Washer	1	
21		Oil Feeder	2	3/16"

DRIVE

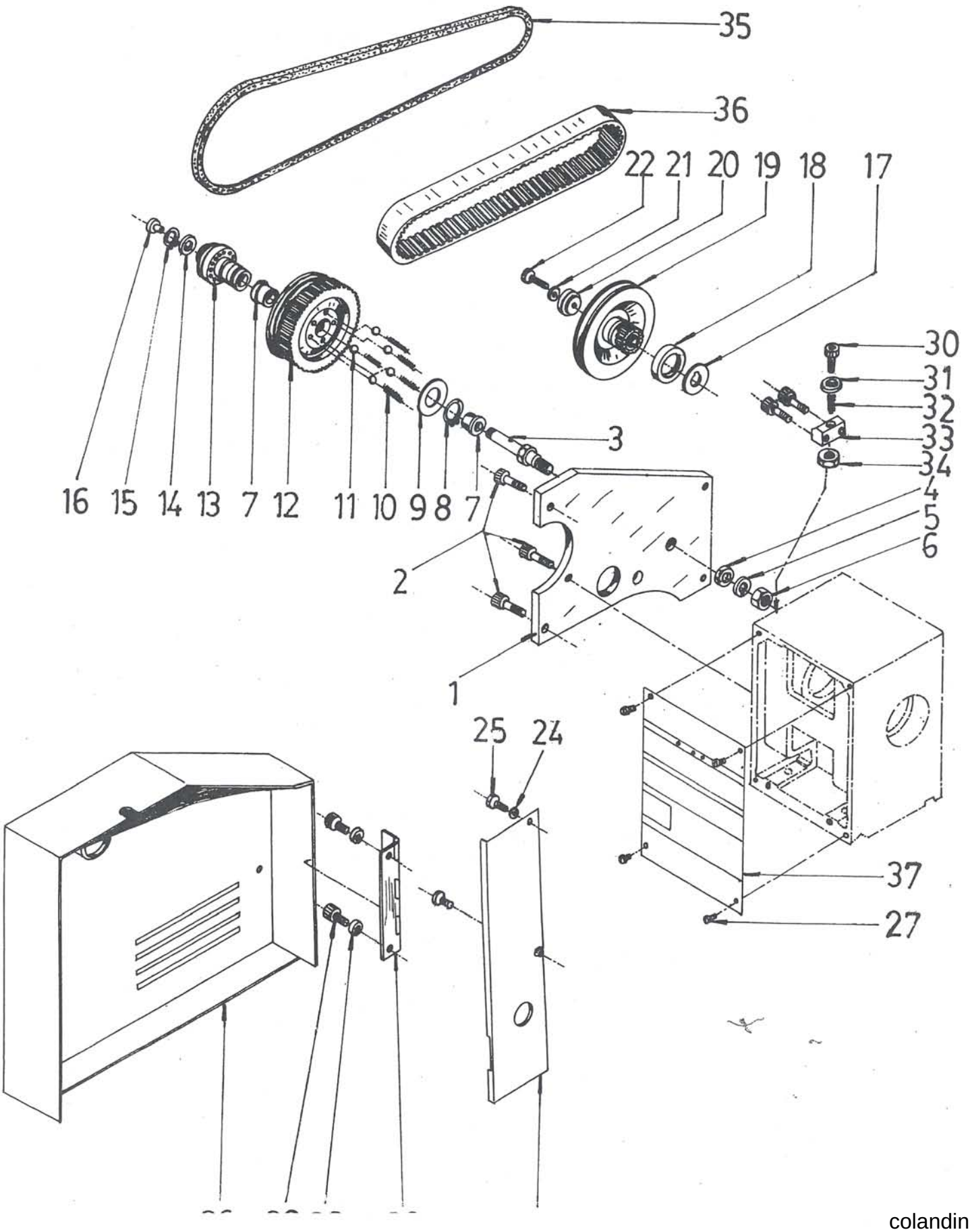

DRIVE

INDEX NO.	PARTS NO.	PARTS NAME	QTY	REMARK
1	0015	Bracket Plate	1	
2		Screw	3	M8x20
3	0016	Belt Pulley Shaft	1	
4		Washer	1	M10
5		Spring Washer	1	M10
6		Nut	1	M10
7	0017	Bush	2	
8		Snap Ring	1	STW-25
9	0020	Washer	1	
10	0021	Spring	5	
11		Ball	5	3/16"
12	0019	Pulley	1	
13	0018	Pulley	1	
14	0028	Washer	1	
15		Snap Ring	1	STW–12
16		Oil Feeder	1	3/16"
17	0041	Spacer	1	
18	0038	Collar	1	
19	0039	Motor Pulley	1	
20	0040	Washer	1	
21		Spring Washer	1	M6
22		Cap Screw	1	M6x25
23	0042	Covermount	1	
24		Washer	3	M5
25		Screw	3	M5x8
26	0043	Cover	1	
27		Screw	4	M4x6
28		Washer	2	M6
29		Screw	2	M6x10
30		Screw	3	M6x20
31		Washer	1	M6
32	0044-1	Spring	1	
33	0044	Clamp Piece	1	
34		Nut	1	M6
35		Vee Belt	1	M5xL710
36		Tooth Belt	1	170XLx½W
37	0060	Plate	1	

TENSIONING ROLLER

INDEX NO.	PARTS NO.	PARTS NAME	Q'TY	REMARK
1	0022	Washer	1	
2	0023	Bolt	1	
3	0024	Lever Bracket	1	
4	0025	Lever	1	
5		Bearing	2	#6001z
6	0027	Roller	1	
7	0028	Washer	1	
8		Snap Ring	1	STW-12
9		Snap Ring	1	RTW-28
10		Washer	1	M10
11		Nut	2	M10
12	0029	Washer	1	
13	0030	Spring	1	
14	0031	Bolt	1	
15	0032	Toggle	1	
16	0033	Bolt	1	
17	0034	Sleeve	1	
18		Snap Ring	1	GTW-6
19		Set Screw	1	M8x12
20		Wave Washer	1	#6304
21		Snap Ring	1	STW-36
22	0035	Lever	1	
23	0036	Lever	1	
24	0037	Knob	1	

TENSIONING ROLLER

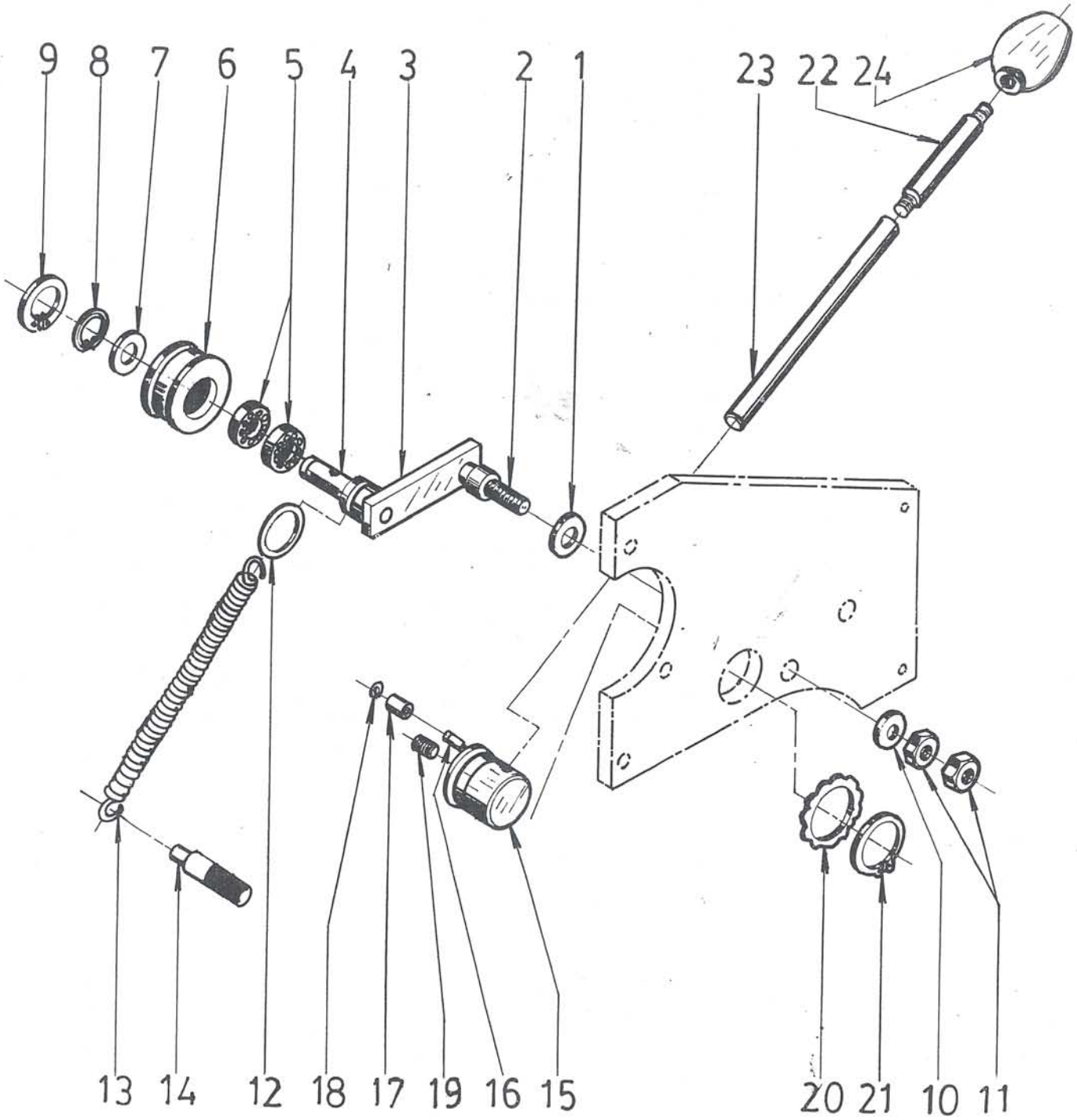

QUADRANT

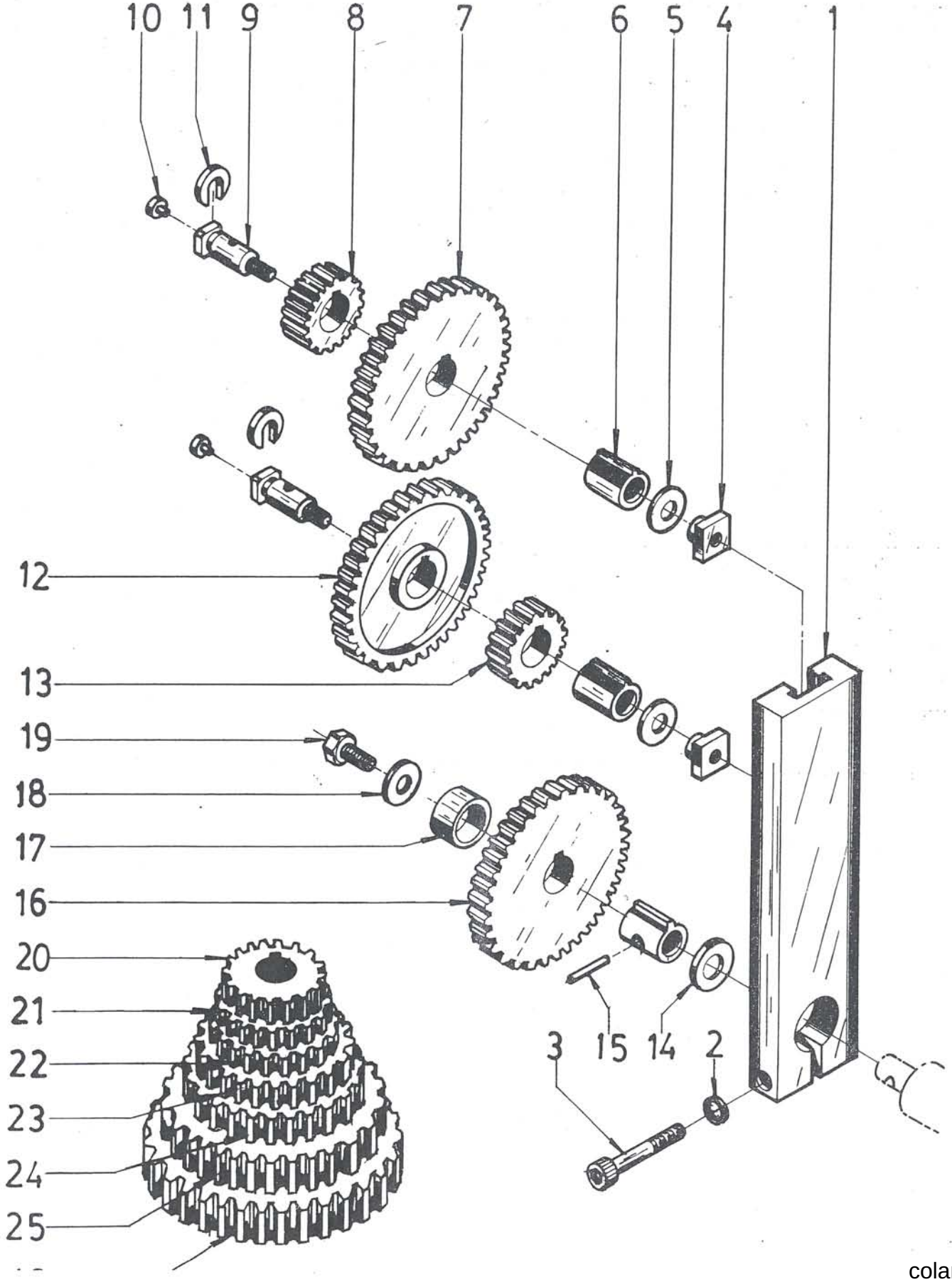

QUADRANT

INDEX NO.	PARTS NO.	PARTS NAME	QTY	REMARK
1	0047	Bracket	1	
2		Spring Washer	1	M6
3		Screw	1	M6x35
4	0048	T-Nut	2	
5	0049	Washer	2	
6	0012	Bush	3	
7	0067	Gear	1	75T
8	0069	Gear	1	65T
9	0050	Shaft	2	
10		Oil Feeder	2	3/16"
11	0014	Washer	2	
12	0070	Gear	1	55T
13	0072	Gear	1	40T
14	1025	Washer	1	
15		Pin	1	ø4x14
16	0066	Gear	2	80T
17	0059	Spacing Ring	1	
18		Washer	1	M6
19		Screw	1	M6x10
20	0074	Gear	1	25T
21	0054	Gear	1	30T
22	0073	Gear	1	35T
23	0071	Gear	1	50T
24	0058	Gear	1	60T
25	0068	Gear	1	70T

DRIVE AND ELECTRICAL EQUIPMENT

INDEX NO.	PARTS NO.	PARTS NAME	QTY	REMARK
1	0046	E-Housing	1	
2		Screw	4	M6x10
3		Washer	4	M6
4	0045	Roofing	1	
5		Clip	1	
6		Condenser	1	
7		Strain Relief Bush	1	
8		Switch	1	
9		Hexagon Screw	4	M5x8
10		Motor	1	1/2HP
11		Washer	4	M5
12		Nut	1	M4
13		Screw	1	M4x12

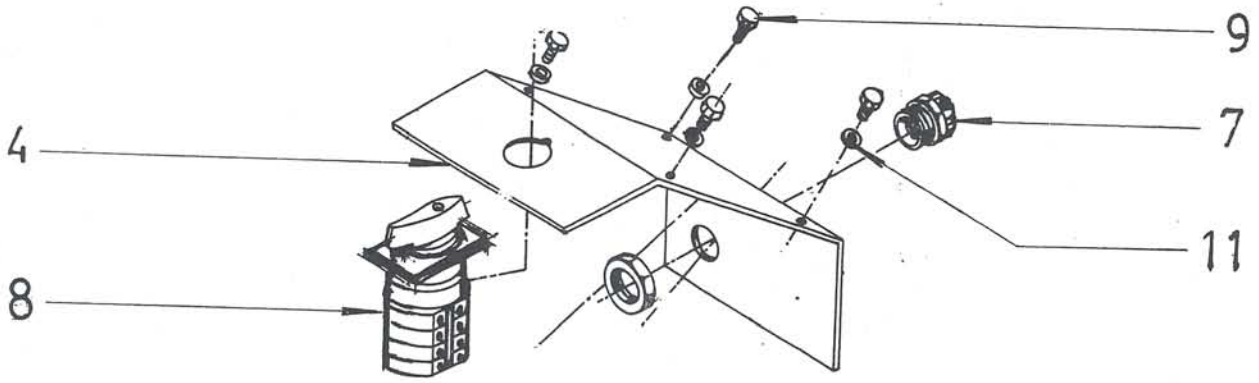

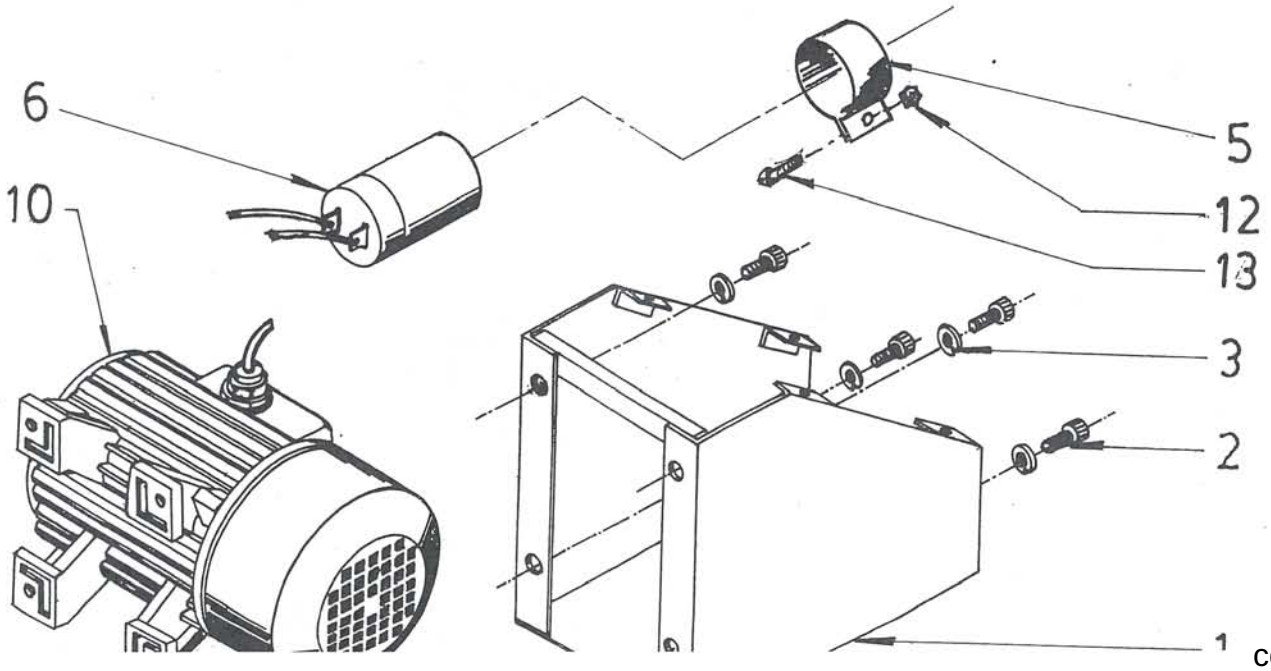

APRON

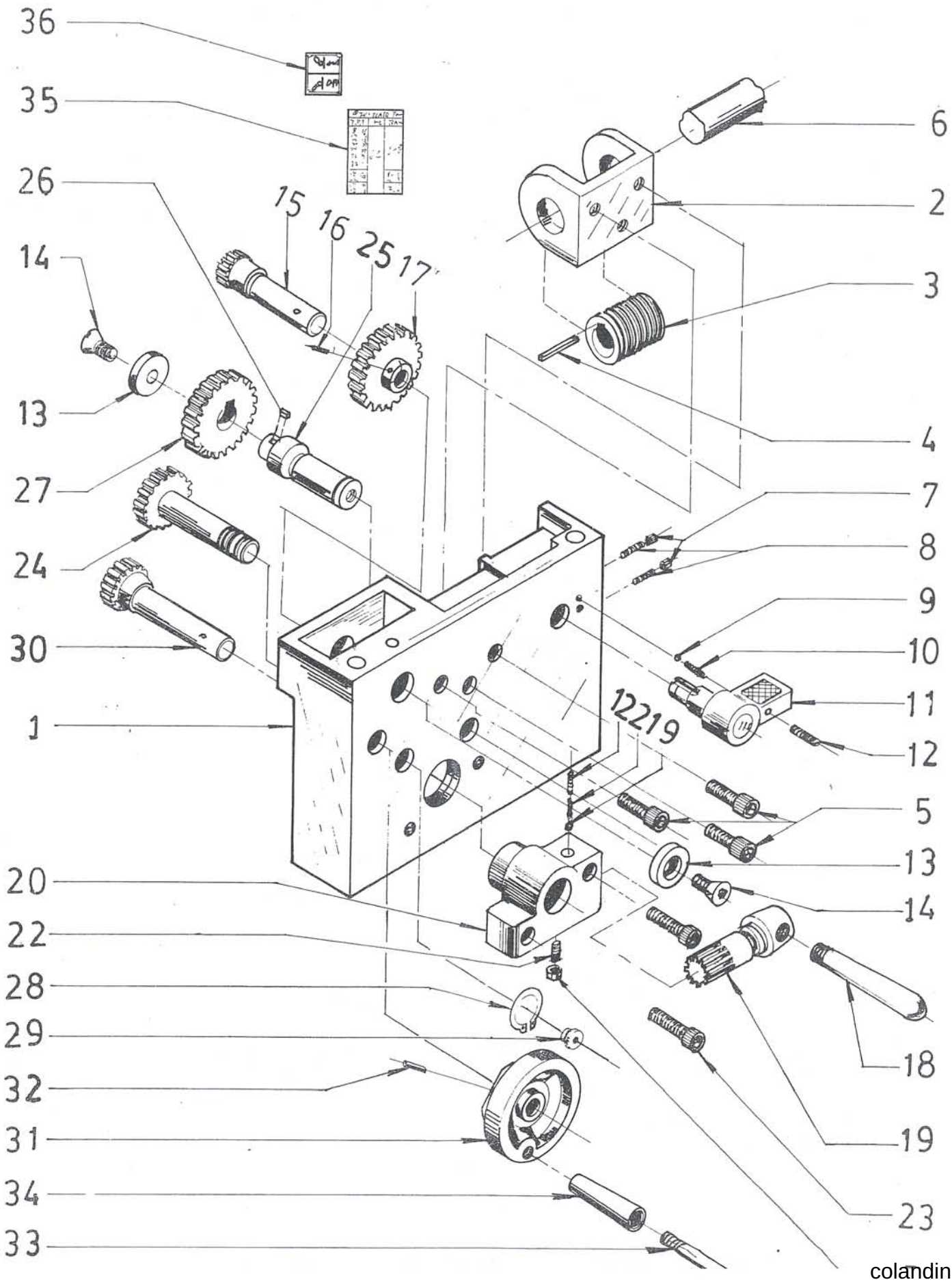

APRON

INDEX NO.	PARTS NO.	PARTS NAME	QTY	REMARK
1	2001	Apron Casting	1	
2	2002	Bracket	1	
3	2003	Worm	1	
4		Key	1	4x4-25L
5		Cap Screw	3	M6x25L
6	7003	Feed Screw	1	
7		Nut	5	M4
8		Set Screw	2	M4x12L
9		Ball	2	3/16"
10	2030	Spring	1	
11	2020	Handle	1	
12		Set Screw	2	M6x6L
13	2006	Washer	3	
14		Screw	3	M6x12
15	2013	Gear	1	12T
16		Spring Pin	1	ø4x30L
17	2012	Gear	1	43T
18	2035	Handle	1	
19	2036	Gear	1	13T
20	2008	Bracket	1	
21	2031	Spring	1	
22		Set Screw	1	M4x12L
23		Cap Screw	2	M6x30L
24	2007	Gear	1	36T
25	2010	Shaft	1	
26		Key	1	4x4-5L
27	2009	Gear	1	41T
28		Ring	1	STW-14
29		Oil Feeder	2	3/16"
30	2011	Gear	1	17T
31	2014	Hand Wheel	1	
32		Spring Pin	1	ø4x24L
33	2016	Screw	1	
34	2015	Handle	1	
35	2027	Thread Cutting Plate	1	
36	2033	Plate	1	

APRON

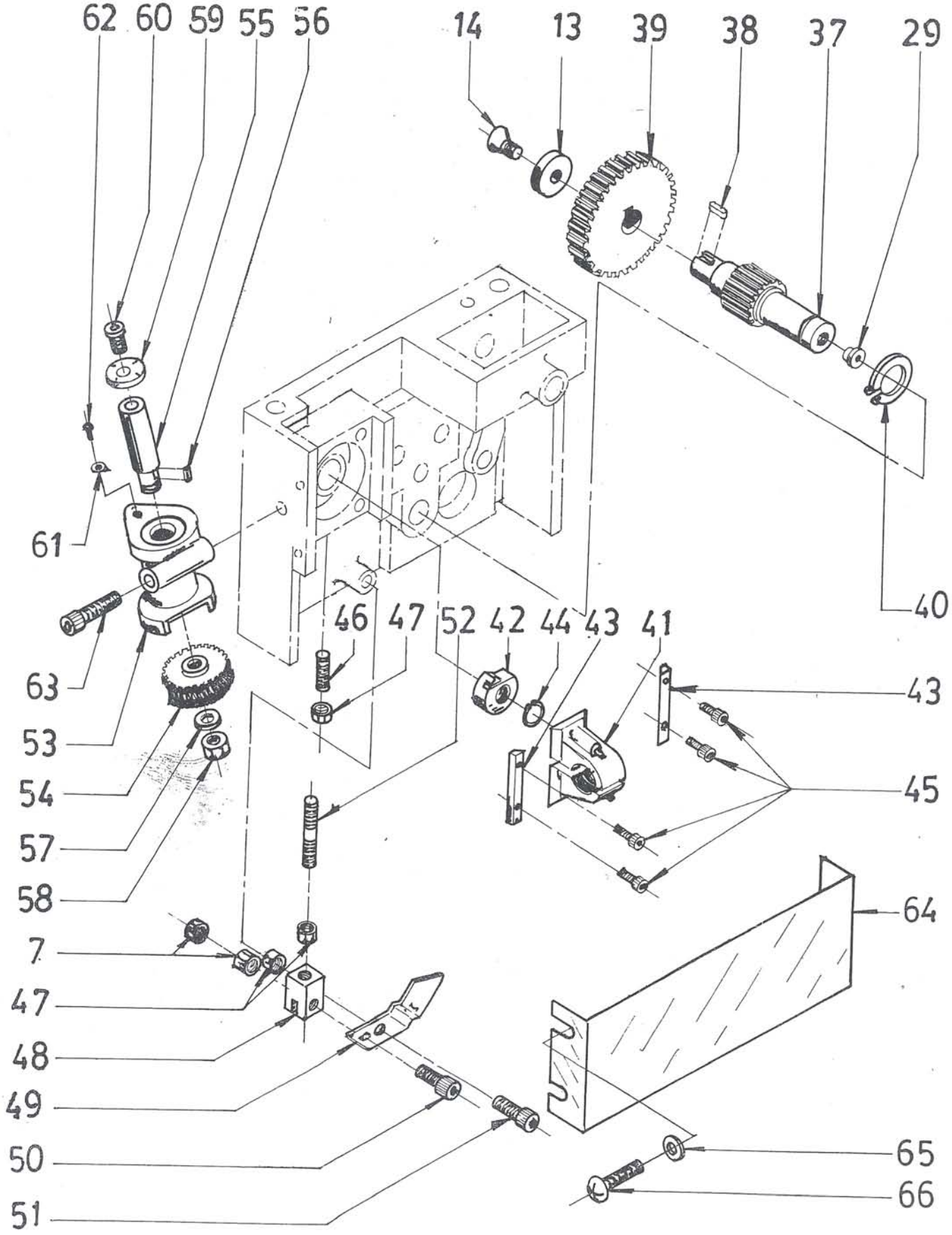

APRON

INDEX NO.	PARTS NO.	PARTS NAME	QTY	REMARK
37	2005	Gear	1	18T
38		Key	1	4x4-10L
39	2004	Worm Gear	1	42T
40		Ring	1	STW-12
41	2017	Half Nut	1	
42	2018	Locking Cam	1	
43	2019	Guide	2	
44		Ring	1	5103-31
45		Cap Screw	4	M4x16L
46		Set Screw	1	M5x25L
47		Nut	3	M5
48	2022	Joint	1	
49	2028	Control Plate	1	
50		Cap Screw	1	M4x20L
51		Cap Screw	1	M5x16L
52	2029	Screw	1	
53	2023	Thread Dial Body	1	
54	2025	Worm Gear	1	64T
55	2024	Shaft	1	
56		Key	1	3x3-9L
57		Spring Washer	1	M8
58		Nut	1	M8
59	2026	Dial	1	
60		Screw	1	M6x8L
61	2034	Pointer	1	
62		Rivet	1	
63		Screw	1	M6x60L
64	2032	Apron Cover	1	
65		Washer	4	M4
66		Screw	4	M4x0.7Px8L

SADDLE AND CROSS SLIDE

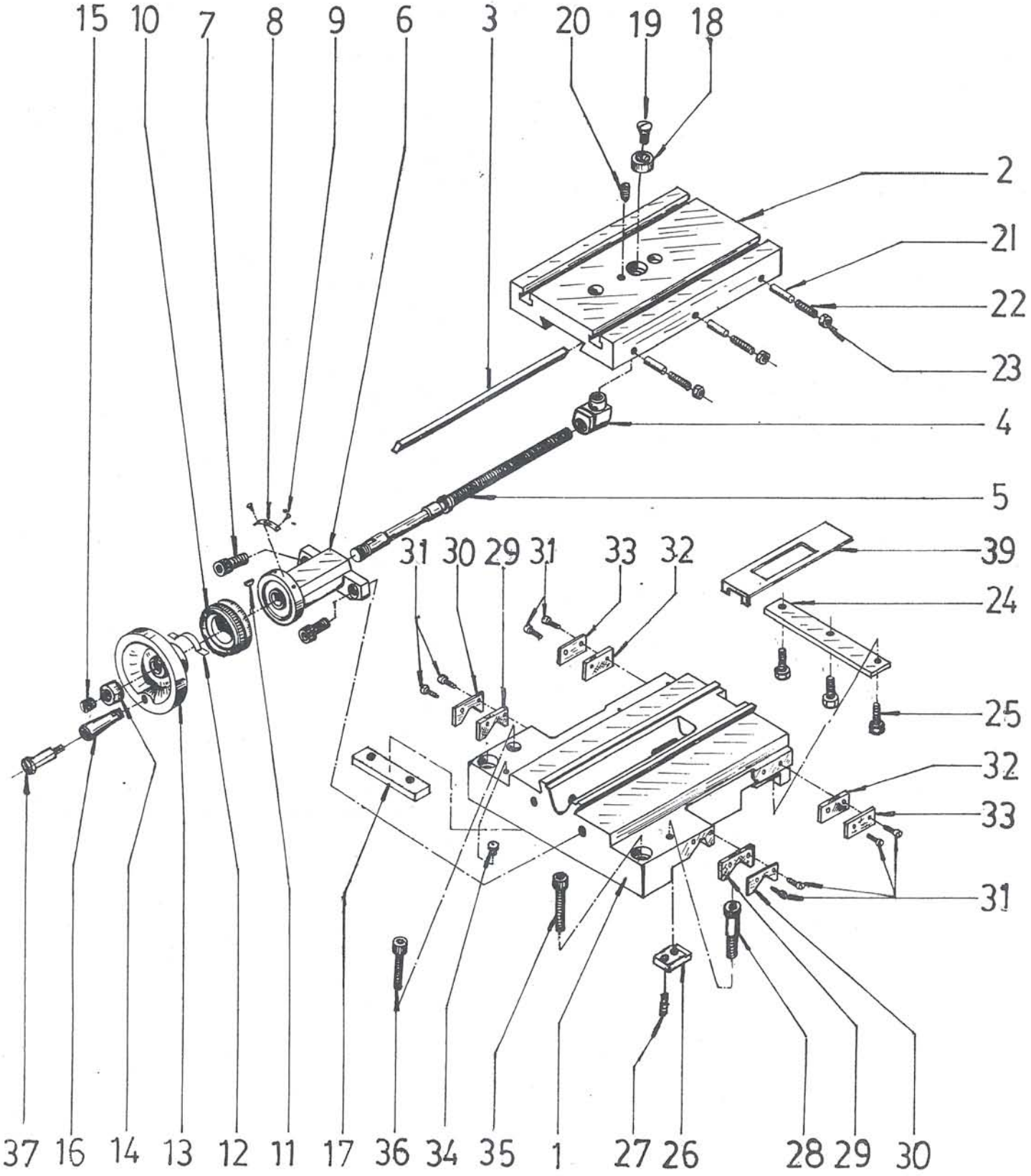

SADDLE AND CROSS SLIDE

INDEX NO.	PARTS NO.	PARTS NAME	QTY	REMARK
1	3001	Saddle	1	
2	3002	Cross Slide	1	
3	3003	Gib	1	
4	3004	Nut	1	
5	3005	Lead Screw	1	
6	3006	Bracket	1	
7		Screw	2	M6x15
8	5013	Plate	1	
9		Rivet	2	
10	3007	Graduated Ring	1	
11		Key	1	3 x ø 13
12	4009	Spring	1	
13	3008	Hand Wheel	1	
14	3009	Nut	1	
15		Set Screw	1	M8x6
16	2015	Handle	1	
17	3010	Slide Guide	1	
18	3011	Washer	1	
19		Screw	1	M6x12
20	3020	Screw	1	M6x12
21	3012	Pin	3	
22		Set Screw	3	M4x12
23		Nut	3	M4
24	3013	Slide Guide	1	
25		Cap Screw	3	M6x15
26	3014	Binding Piece	1	
27		Set Screw	1	M6x20
28		Screw	1	M6x25
29	3015	Way Cover	2	
30	3016	Cover Mount	2	
31		Screw	8	M4x6
32	3017	Way Cover	2	
33	3018	Cover Mount	2	
34		Oil Feeder	1	3/16"
35		Cap Screw	2	M8x30
36		Cap Screw	2	M6x25
37	2016	Screw	1	
38	3019	Cover Mount	1	

TOP SLIDE

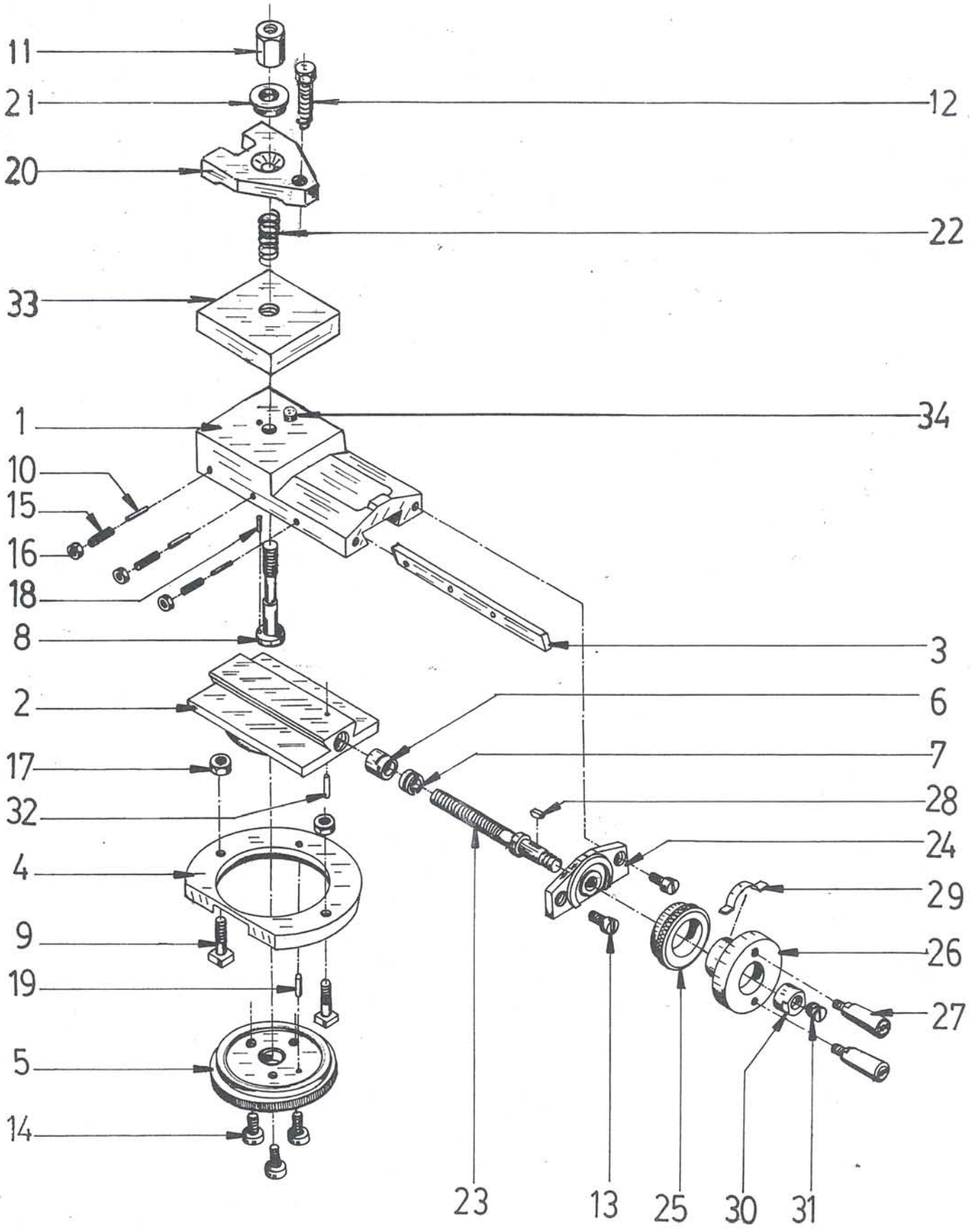

TOP SLIDE

INDEX NO.	PARTS NO.	PARTS NAME	QTY	REMARK
1	4001	Longitude Slide	1	
2	4002	Swivel Base	1	
3	4003	Gib	1	
4	4012	Clamping Ring	1	
5	4014	Micrometer Pan	1	
6	4004	Lead Screw Nut	1	
7	4005	Adjusting Screw	1	
8	4015	Screw	1	
9	4013	T-Cap Screw	2	
10	4020	Pin	3	
11	4019	Nut	1	
12	4021	Hexagon Head Screw	1	M8x30L
13		Flat Head Screw	2	M5x10L
14		Flat Head Screw	3	M6x12L
15		Set Screw	3	M4x10L
16		Nut	3	M4
17		Nut	2	M6
18		Lock Pin	1	M3x8L
19		Lock Pin	1	M3x14L
20	4017	Tool Clamp	1	
21	4018	Washer	1	
22	4016	Spring	1	
23	4006	Lead Screw	1	
24	4007	Lead Screw Mount	1	
25	4008	Micrometer Collar	1	
26	4010	Handwheel	1	
27	4011	Handle	2	
28		Key	1	M3 ϕ10
29	4009	Feed Spring	1	
30	3009	Nut	1	M8
31		Set Screw	1	M8x6L
32		Lock Pin	1	M2x12L
33	4023	Surface Plate	1	
34	4026	Pin	1	

TAILSTOCK

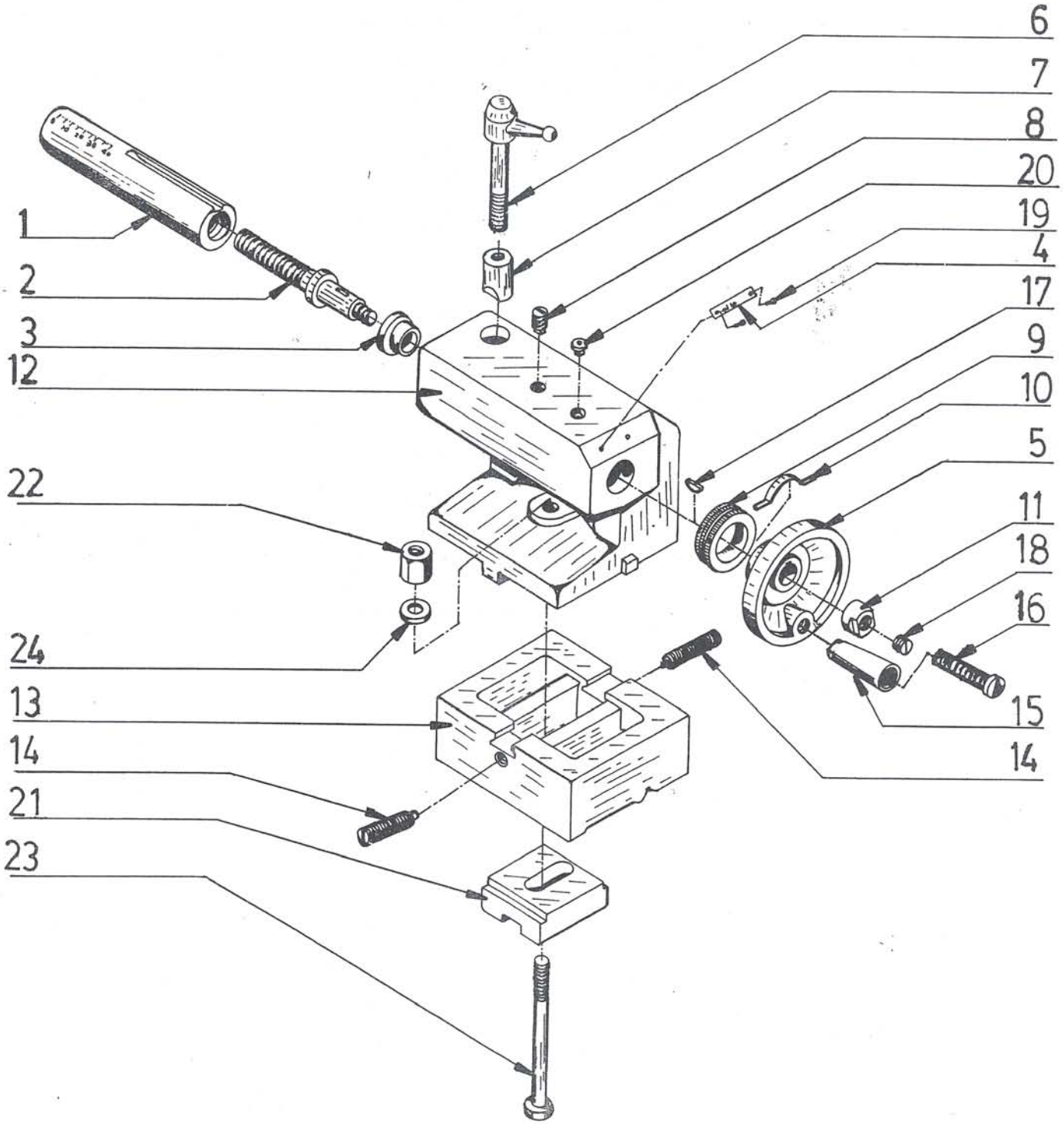

TAILSTOCK

INDEX NO.	PARTS NO.	PARTS NAME	QTY	REMARK
1	5002	Tailstock Ram	1	
2	5003	Lead Screw	1	
3	5004	Bushing	1	
4	5013	Plate	1	
5	5005	Handwheel	1	
6	5008	Lever	1	
7	5007	Clamp	1	
8		Set Screw	1	M5x10
9	4008	Micrometer Collar	1	
10	4009	Feed Spring	1	
11	3009	Nut	1	M8
12	5001	Tailstock	1	
13	5010	Tailstock Base	1	
14	5012	Set Screw	2	M6x25
15	2015	Handle	1	
16	2016	Screw	1	
17		Key	1	3 x ø 10
18		Set Screw	1	M8x6L
19		Rivet	2	
20		Oil Feeder	1	3/16"
21	5011	Clamping Plate	2	
22	5009	Nut	1	M8
23		Screw	1	M8x 100 L
24		Washer	1	M8

CENTER STEADY REST

INDEX NO.	PARTS NO.	PARTS NAME	QTY	REMARK
1	6001	Rest Casting	1	
2	6002	Jaw	3	
3	6003	Screw	3	
4		Spring Washer	3	M8
5		Nut	3	M8
6	6004	Adjust Screw	3	
7	5011	Clamping Plate	1	
8		Hexagoal Screw	1	M8x55L
9		Washer	1	M8

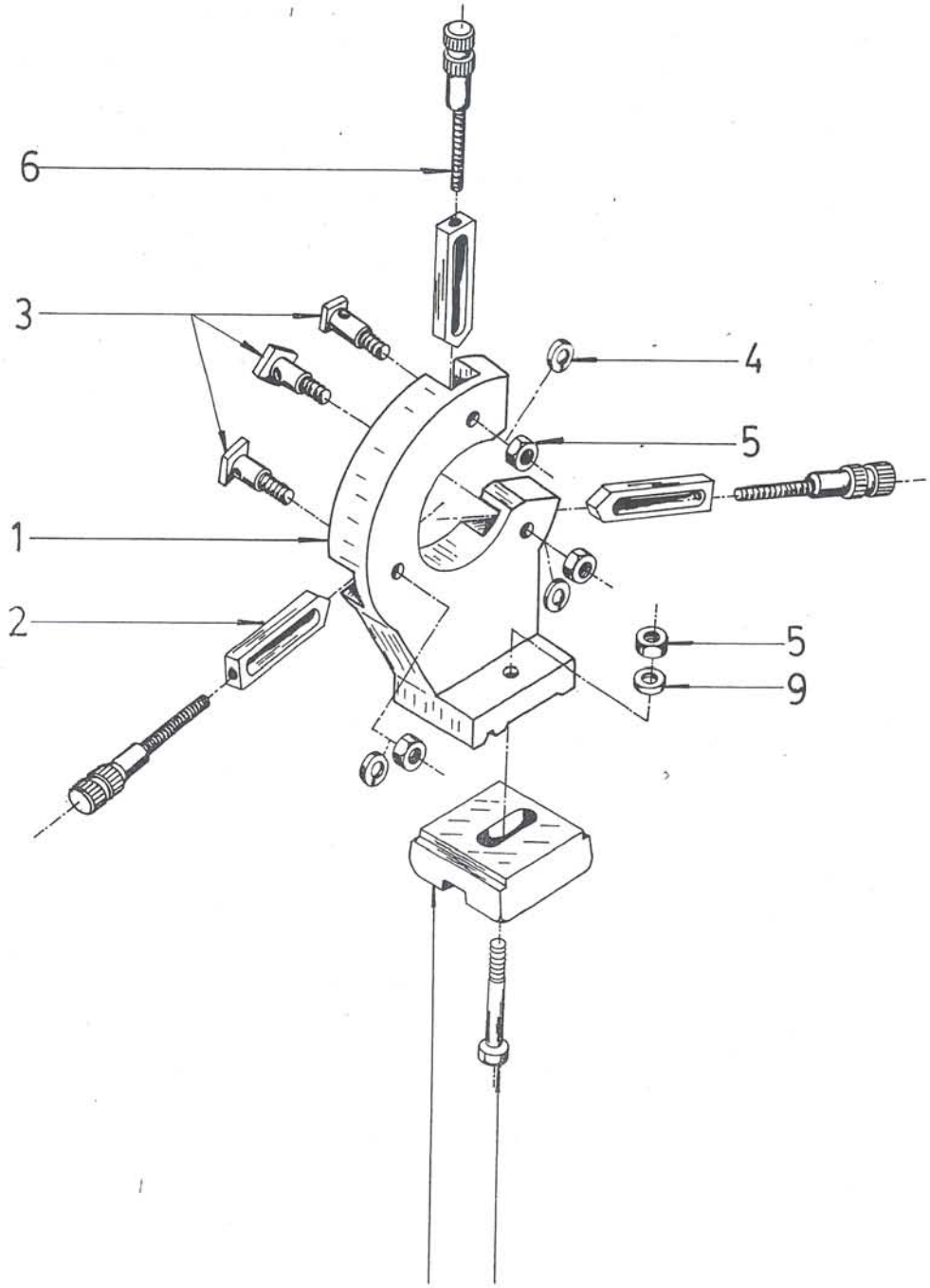

TRAVELLING STEADY REST

INDEX NO.	PARTS NO.	PARTS NAME	QTY	REMARK
1	6005	Rest Casting	1	
2	6006	Jaw	2	
3	6003	Screw	2	
4	6004	Adjust Screw	2	
5		Nut	2	M8
6		Spring Washer	2	M8
7		Cap Screw	2	M6x25L
8		Washer	2	M6